epoke®

If you have technical questions please state ident. no., which is on the machine sign. We recommend that you write this number here:

Type: .....

Year: ..... Ident. no.: .....

Instruction manual
SKE

Valid from ident. no. xxxx0200

Valid from ident. no.:	
SKE 8	10010200
SKE 12	10030200
SKE 15	10040200
SKE 20	10050200

Changes of technical details in relation to specifications and sketches in this instruction are subject to alteration.

This instruction answers important questions regarding safety, operation, maintenance and technical data.

Published and printed by
Epoke® A/S,
Documentation department

Table of contents

1 Identification
1.1 Manufacturer and supplier 2
1.1.1 Copyright 2
1.1.2 Technical documentation 2
1.1.3 Warranty and liability 2

1.2 Model and type specification 3
1.3 Start no. and date 3
1.4 Country of origin 3
1.5 CE-mark 3

1.6 EU certificate of conformity 3
1.6.1 Directives applied 3
1.6.2 Standards applied 3

1.9 Quality system certificate 3

2 Descriptions
2.0.0 General 4

2.0.1 Transport and handling 4
2.0.1.1 Transport 4
2.0.1.2 Handling 4

2.0.1.6 Rules for total weight of towed vehicles 4

2.0.2 Information on restrictions on use 4
2.0.2.1 Normal use 4
2.0.2.2 Abnormal use 4

2.0.3 Hazards presented by the machine
2.0.3.1 Personal protective measures 4
2.0.3.2 Mechanical hazard 4
2.0.3.3 Electrical hazard 4
2.0.3.4 Thermal hazard 5
2.0.3.5 Hazard caused by noise 5
2.0.3.6 Hazard caused by vibrations 5
2.0.3.7 Hazard caused by radiation 5
2.0.3.8 Hazard caused by materials and substances . . 5

2.1 Safety measures
2.1.1 General safety measures 5
2.1.2 Reference to permitted total weight 5

2.1.3 Reference to safety measures for specific operating conditions 6
2.1.3.1 Safety measuresWork safety 6
2.1.3.2 Work safety 6
2.1.3.3 Before driving 6
2.1.3.4 Safety during cleaning, repairs and maintenance 6
2.1.3.5 Suggestions for a user guide 7

2.1.11 Lubricating grease 7

2.2 Product descriptions
2.2.0.1 Machine overview 8
2.2.1 Product description 8
2.2.4 Dosage system 9

2.3 Technical data
2.3.1 Technical data 11
2.3.2 Dimensioned sketch 12

2.4 Diagrams
2.4.3 Electrical diagram 12

2.5 Corrosion protection 12

3 Demands to the place of mounting
3.1 Demands to the bed plate 13
3.2 References to dangers which can be prevented by methods of mounting 13

4 Instructions for preparations
4.1.1 Connection with the towing vehicle 13
4.1.2 Disconnection 13

5 Operation instructions
5.0.1 Remote control 13
5.1.5 Operating levers 13

5.2 Instructions for Initial Operation
5.2.2 Adjustment of spreading quantity (metering) . . 14

5.4.2 Remote control 14
5.4.2.1 Correct installation 14
5.4.2.2 Connection of remote control 14

5.11 Procedure in case of failure 15
5.12 Instructions for repair and assembly 15

6 Maintenance
6.2.1 Cleaning 15
6.2.2 Maintenance 15
6.2.3 Storing 15

6.3 Inspection lists and overviews
6.3.1 Inspection list - mechanical 16
6.3.4 Grease 18

6.7 Reference to suitable spare parts 18

7 Control and test sketch
7.1.2 Steadying wheel 19
7.1.6 Dry matter container 20
7.1.12 Draw bar 21
7.1.20 Tyre list 22

8 Certificates
8.1 EU certificate of conformity 23
8.4 Certificate of Quality Management System . . 24

9 Overview of standards 25

20 Index 26

1 Identification

1.1 Manufacturer and supplier

Epoke® A/S
Vejenvej 50
Askov
DK-6600 Vejen

1.1.1 Copyright

The firm of Epoke® A/S, DK-6600 Vejen owns the copyright to this technical documentation.

Mechanical, photographic or other reproduction or duplication of this technical documentation or parts of it is forbidden. The technical documentation is only intended for the purchaser and his personnel.

1.1.2 Technical documentation

This technical documentation contains:

- An instruction book
- List of spare parts

These appendices contain basic instructions which must be followed and read by the fitter / user before assembly and commissioning. The technical documentation shall always be available where the spreader is used.

The personnel who will be involved in operation, servicing, inspection and assembly shall have the corresponding qualifications for these areas of work. The area of responsibility, competence and monitoring of personnel must be defined exactly by the employer. If personnel do not have the necessary knowledge, they must be trained and instructed. If necessary, this can be implemented through the manufacturer/supplier as desired by the purchaser/user of the spreader. Training abroad is carried out by the local dealers. Moreover, the employer/user must ensure that personnel have fully understood the content of the technical documentation.

1.1.3 Warranty and liability

The general terms of sale and delivery apply unless agreed otherwise and confirmed in writing upon entering into the contract. Warranty liability and liability for damages are excluded for personal injury and material damage if the injury or damage may be due to one or more of the following reasons:

- Abnormal use of the spreader
- Inexpert assembly, commissioning operation and servicing of the spreader.
- Driving with the spreader with defective safety devices or incorrectly applied or non-functioning safety and protection devices.
- Non-compliance with the instructions in the technical documentation with regard to safety, transportation, storage, assembly, commissioning, operation and maintenance of the spreader.
- Design changes to the spreader which are not performed or approved by the manufacturer.
- Use of non-EPOKE original spare parts
- Inadequate monitoring of parts which are exposed to wear.
- Inexpertly executed repairs

1.2 Model and type

Model: Tow-behind spreader
Trade designation: SKE - serie

Type: SKE8
SKE12
SKE15
SKE20

Ident. no.: 1001xxxx (SKE8)
1003xxxx (SKE12)
1004xxxx (SKE15)
1005xxxx (SKE20)
(first 4 digits are type designation, the last 4 digits are continuous numbering)

Composition of machine sign:
- Type:
- Ident. no.
- Year
- Volume, m^3
- Net weight kg
- Permitted axle load, kg
- Permitted total weight kg
- Permitted support load, kg
- Name and address of manufacturer

The nameplate is located on the spreader's right side, near the transmission.

1.3 Start no. and year

Valid from ID no.:

SKE8	-	11010200 - 2000
SKE12	-	10030200 - 2000
SKE15	-	10040200 - 2000
SKE20	-	10050200 - 2000

1.4 Country of origin

Denmark.

1.5 CE-mark

CE-mark is placed on the machine sign.

1.6 EU certificate of conformity

The above spreader has been manufactured in accordance with the provisions of the COUNCIL DIRECTIVE of 22. June 1998 on convergence of member states' legislation on machinery (98/37/EF) with particular reference to Appendix 1 of the Directive, on material health and safety standards in connection with the construction and manufacture of machines, see item 8.

1.6.1 Directives applied

(89/392/EEC - 14.06.1989)
(91/368/EEC - 20.06.1991)
(93/44/EEC - 14.06.1993)
(93/68/EEC - 22.07.1993)
98/37/EF - 22.06.1998

1.6.2 Standards applied

EN292-1:1991
EN292-2:1991/A1:1995
EN294:1992
EN349:1993
EN811:1996
EN 953:1997
EN1037:1996
EN 1050:1997
EN1088:1996
prEN13021:1997
see item 9.1.

1.9 Quality system certificate

See item 8.4.

2 Descriptions

2.0.0 General

Important instructions are highlighted in each section.

Explanations of symbols

Warning (Work safety signal)



Safety should be observed where this sign is positioned. Pay attention to this safety information sign and follow it be careful. Always follow the general safety regulations as well.

Information



In the instructions for use, this symbol is placed next to all important information relating to operation or the equipment's function.

Later on, these symbols will be used for visual registration of danger information signs.

2.0.1 Transport and handling

2.0.1.1 Transport

During transport, empty the solids tank and the loosen spring base adjustment on the spreader.



Danger!
Road-users may be seriously injured, e.g. due to projec-ting parts, loss of the spreader, etc.! The spreader should be properly fastened.

Information!

- The spreader should only be put down on a level surface.
- The spreader should be adequately secured on the carrying vehicle.
- Electrical parts should be protected against humidity.

2.0.1.2 Handling



A crane must be used at all times when transporting or using the spreader. The spreader should be raised using the fastening rings.

Note the lifting tackle's load capacity and the spreader's centre of gravity!

People can be seriously injured - e.g. through crushing!

2.0.1.6 Rules for total weight of towed vehicles



The total weight of the towed vehicle must never exceed the weight limits stated by the manufacturer of the vehicle/towbar.

In the case of cars, the weight limit may be found on the manufacturer's label on the car or in the user manual.

2.0.2 Information on restrictions on use

2.0.2.1 Normal use



Machines for winter service are machines for removing winter obstacles in traffic areas, and spreaders are machines for defined spreading of thawing materials or sand on surfaces carrying traffic.

The spreaders must only be used for the purpose for which they are intended. The spreaders must only be operated, repaired and maintained by persons who are fully familiar with these areas. These persons shall also be informed about the dangers which the spreader can pose.

Note - Only persons who are physically and psychologically suitable, and who are familiar with the content of the operating instructions, may use the machine.

The user shall comply with the references in the operating instructions.

Note - The manufacturer's liability for any damage that may occur shall lapse in the event of any form of abnormal use.

2.0.2.2 Abnormal use

Abnormal use



- when the spreaders are not used as spreaders for winter service, and when the spreader has not been mounted and connected correctly to the towing vehicle.
- when the spreader is used for spreading materials which are not used for combating icy roads.
- when the spreader is towed using an unsuitable vehicle without taking into account the weight limits imposed by the manufacturer of the vehicle. (trailer spreader only).

2.0.3 Hazards presented by the machine

2.0.3.1 Personal protective measures



As the design and construction ensure that the operator's freedom of movement is not reduced, use of personal protective measures (shoes, gloves etc.) is not required.

2.0.3.2 Mechanical hazard



There is a risk of injury and damage from squashing, cutting and from sharp edges. To the extent possible, points on machines that present such hazards are fitted with protective devices.

2.0.3.3 Electrical hazard



- Work on the power supply must only be carried out by an expert electrician.
- Loose connections and burnt-out cables must be replaced immediately.
- Use only original fuses.

2.0.3.4 Thermal hazard
Thermal Hazard - not applicable.

2.0.3.5 Hazard caused by noise
A noise measurement has not been carried out as the noise pollution depends on the used vehicle.

2.0.3.6 Hazard caused by vibrations
Vibration measurement is omitted - not relevant.

2.0.3.7 Hazard caused by radiation
Radiation measurement is omitted - not relevant.

2.0.3.8 Hazard caused by materials and substances
Demounting (scrapping): Is to be carried out by a environmental acknowledged scrap merchant.

2.1 Safety measures
2.1.1 General safety measures


All EPOKE spreaders and equipment can be operated by one person. Spread is controlled entirely from the driver's cab.

Instruction - The owner of the carrying vehicle undertakes to ensure that the spreader is used only by people who:
- know the basic safety regulations and are thoroughly familiar with the operation of the spreader
- have read and understood the section on safety and the warnings in the technical documentation.

Instruction - Everyone who is authorised to work with the spreader undertakes:
- to familiarise themselves with the basic safety regulations.
- to read and understand the section on safety and the warnings in the technical documentation.

Instruction - only trained and instructed personnel are permitted to work with the spreader:
- The authorisation of the personnel for starting, operating, maintenance and repair must be clearly defined.
- Personnel in training may only work with the spreader under the supervision of an experienced person.

Instruction - The spreader is designed with the safety regulations in mind. Even so, the life of the driver may be at risk while the machine is in use.
The spreader may only be used for its intended purpose and in the proper condition as regards safety equipment.

Out of consideration for safety, the following is to be observed:
Before operation the operator is to check whether devices for control, safety and protection are correctly fitted and ok.

If defects are noted on safety devices or when other defects are noted which have influence on the safe operation of the machine, there cannot be any operation until these defects have been repaired.

Correction of flaws, maintenance and repairs are only to be carried out, when the machine is not in operation.
After maintenance or repairs, the safety devices are to be correctly placed.

2.1.2 Reference to permitted total weight
SKE8

Permitted total weight	1200 kg
Permitted axle load	1000 kg
Supporting load on draweye	200 kg
Net weight	400 kg

SKE12

Permitted total weight	1500 kg
Permitted axle load	1200 kg
Supporting load on draweye	300 kg
Net weight	500 kg

SKE15

Permitted total weight	2660 kg
Permitted axle load	1210 kg
Supporting load on draweye	560 kg
Net weight	600 kg

SKE20

Permitted total weight	3500 kg
Permitted axle load	2800 kg
Supporting load on draweye	750 kg
Net weight	720 kg

2.1.3 Reference to safety measures for specific operating conditions

2.1.3.1 Safety measures

- The tow plate of the spreader must be vertical when the vehicle is loaded.

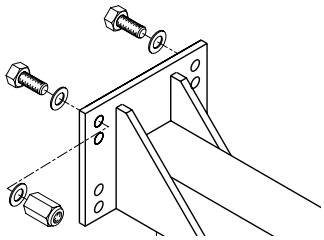

- The draw bar is adjustable for height as well as length. Important: When adjusting height, self-locking nuts (A) must only be used once, i.e. always use new self-locking nuts. Nut (M14 DIN 985 A2) torque must be 120 Nm.

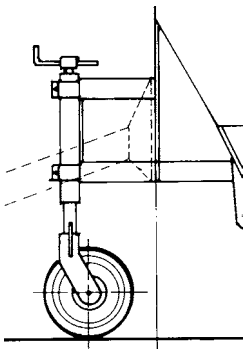

- The stabiliser/supporting leg facilitates connection/disconnection of the spreader. Before driving, the driver must check that the stabiliser/supporting leg has been lifted.

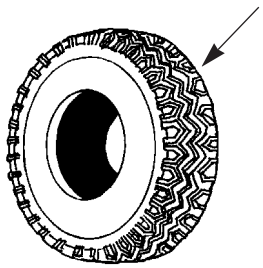

- The depth of the tyre tread pattern must be min. 1.6 mm. For information on air pressure in the road tyres.

2.1.3.2 Work safety

- Protection devices: The equipment must not be operated without protection devices.
- The drawbar position must not be above horizontal position due to the risk of tipping.

See section 2.1.2 Total weight reference – support load.

- Driving gear: The warranty and liability become void if changes are made to the driving gear.
- Oblique position: The road may have a maximum inclination of 10%.
- The spreader must only be subjected to repair work when the motor of the towing vehicle has been stopped.
- Following repair work, all safety devices must be connected to the spreader.
- Unauthorised persons are to be turned away from the danger zone.
- Persons must not be in the immediate proximity of the machine (1 m to the side of the machine) when the machine is operating.
- **Notice!** - Only spare parts recommended by the manufacturer must be used.

2.1.3.3 Before driving

Before starting, the driver should check that:

- the tow plate of the spreader must be vertical when the vehicle is loaded.
- the spreader's towbar is correctly positioned and secured to the tow-bar on the vehicle.
- the stabilizers have been raised.
- the safety devices are functioning.
- electrical connections and power supply have been connected.
- the lights are functioning.
- the operating device has been fitted.
- the air pressure in the tyres is correct.

Remember to check adjustments.

2.1.3.4 Safety during cleaning, repairs and maintenance

- When cleaning, repairs, maintenance and similar work is performed on the spreader, the motor of the towing vehicle must be stopped.
- Intervals of maintenance are divided into operating hours and apply to normal operating terms.
- Please observe the specified intervals of maintenance.
- See the maintenance and inspection list.
- Only the spare parts approved and recommended by the manufacturer must be used.
  Please use the original Epoke-spare parts only.
- After repair, safety devices must be correctly fitted again.
- It is not allowed to drive without safety devices.

2.1.3.5 Suggestions for a user guide



For a safe operation, the employer has to make a user´s guide.

Employer is required to equip the tool with various devices and make all necessary arrangements which correspond to the applicable safety instruction, technical and medical regulations.

The employer has to instruct the users of the dangers, which may arise from operation with the tool and precautions which must be made, and thereafter the instruction must be repeated at regular intervals, at least once a year.

The employer can fulfill this requirement by providing a user´s guide. Please be aware of the legislation concerning the safety area.

You may pass on the following instructions/information of the operation to your staff e.g.:

- Normal/permitted usage
- Abnormal usage
- Safety in public traffic
- The user must be aware of, that his/her presence in the danger zone (working area) is forbidden.
- Information of safety devices.
- If a fault/defect arises in the equipment in the equipment which may present a risk/danger to the insured parties, the equipment must be stopped.
- First aid instructions
- Operational safety
- Reference to faults and their rectification
- Instructions regarding the warning instructions
- Permissible operating data
- Environmental protection
- Supervision during use
- Servicing
- Maintenance
- Repair work on load-bearing and other technical parts relating to safety.

2.1.11 Lubricating grease

Long-term or repeated contact with the skin can entail irritation or serious skin problems. Wash thoroughly with soap and water. Avoid inhalation of grease fumes. Avoid wearing clothing wetted with grease.

2.2 Product descriptions
2.2.0.1 Machine overview

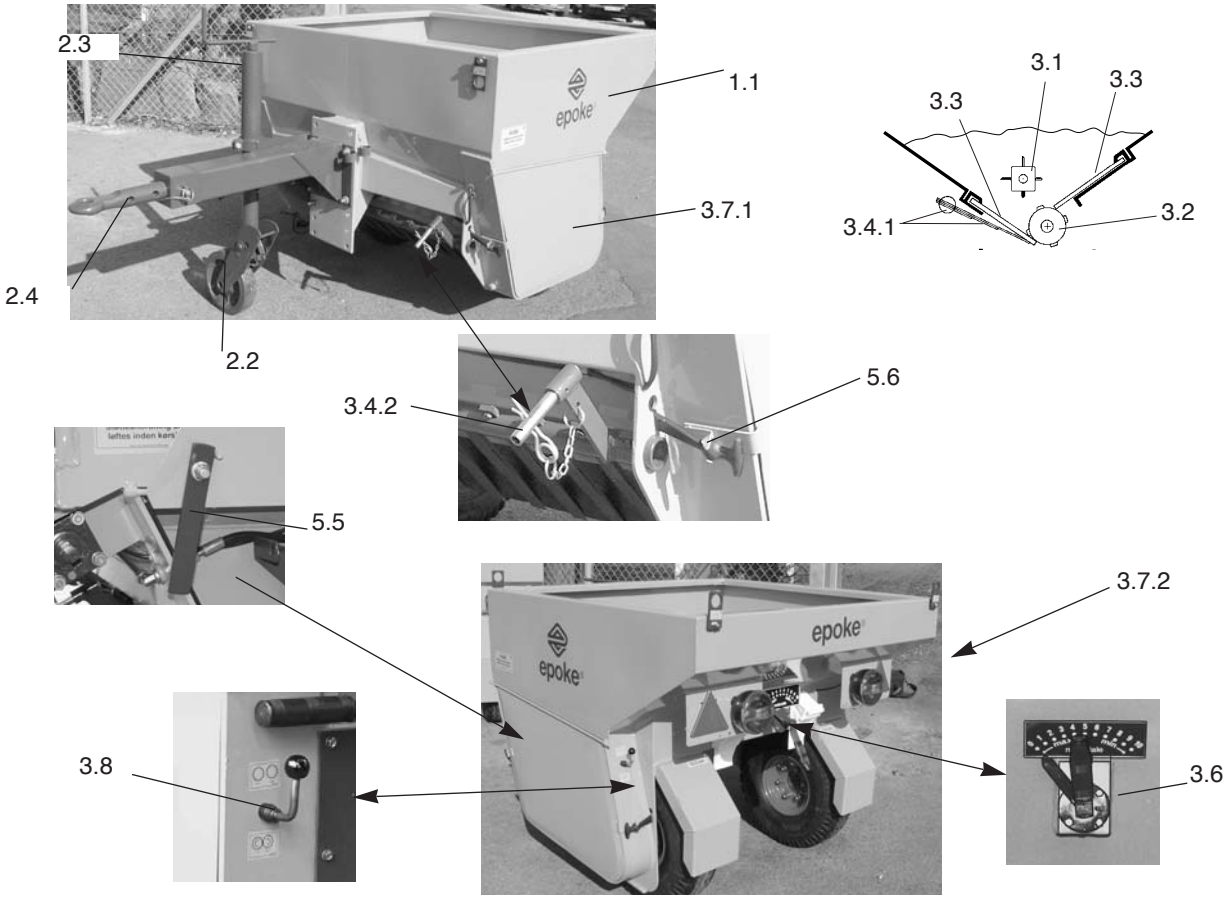

1.1 SKE spreaders
2.2 Stabiliser
2.3 Stabiliser spindle
2.4 Pull device

3.1 Impellor shaft
3.2 Delivery roller
3.3 Rubber base
3.4.1 Spring base
3.4.2 Spring base stop
3.6 Spring base adjustment

3.7.1 Transmission from drive wheel, over downward gearing to delivery drum
3.7.2 Transmission from delivery drum to mixer
3.8 Handle for manual operation of connection and disconnection of spreading
5.5 Holder for transmission exposure
5.6 Rubber bonnet for transmission exposure

2.2.1 Product description
The Epoke SKE towed spreader is a surface-dependent drum spreader for spreading salt, sand and grit.

The SKE spreaders are fitted with the Epoke dosing system where the delivery drum and mixer are pulled from the spreader drive wheel via mechanical gearing.

The SKE may be equipped with different gearings (SKE8/SKE12 - 11%, 24%, 36%, 76% and SKE15/SKE20 - 24%, 38%) in the delivery drum in relation to the wheels.

Operation: The wheels supply all the energy needed for operation of the spreader, which is thus completely surface-dependent.

Dosing system: The material tank and the supporting frame are welded together. The tank is fitted with a mixer shaft and a dosing unit. The mixer shaft prevents the spreading material from building up, thus grinding and distributing the spreading material over the entire length of the tank.
The dosing unit is situated under the mixer shaft, consists of the spring-supported rubber base and the delivery drum, whose function is to dose the material to the road surface. The drop, i.e. the distance between the road and the dosing drum, is relatively small, thus making the spreaders practically insensitive to side winds and turbulence. As a result, the spreading material is delivered where it is needed, i.e. on the road surface.

Material volume: The indicated material volume is delivered surface-dependently at any speed of driving, as the dosing unit speed depends on the vehicle speed. Set the material volume (at input) by adjusting the spring base.

Stabiliser: The SKE features an ungraduated adjustable stabiliser.

2.2.4

1

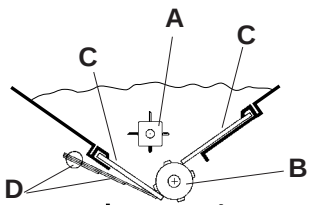

2

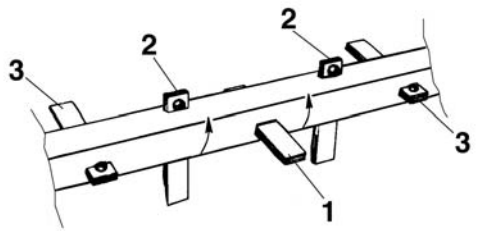

3

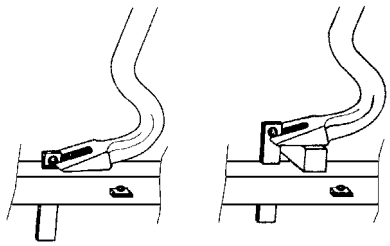

4



5



6

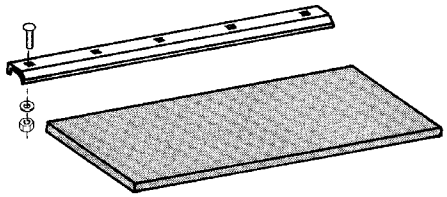

7

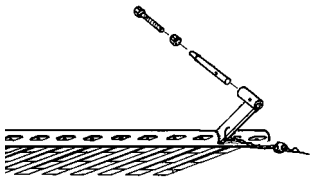

8

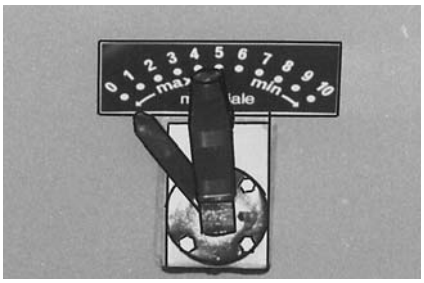

9

10

2.2.4 Metering system

1 The Epoke principle
A - Impellor shaft with springs
B - Delivery roller with cams
C - Rubber base
D - Spring base

2 The impellor shaft pulverizes all lumps, distributes the spreading material in the whole length of the hopper, and ensures constant supply to the delivery roller.

Impellor springs: When replacing defect impellor springs, the flat side is to point to the front in working direction and be placed in two spirals, which start in the centre, whereby the material is lead towards the centre. Start with no. 1 in the middle. Turn the tube 1/4 turn forward in the working direction, mount pair no. 2 equally on each side of no. 1. Turn 1/4 turn in the working direction, mount pair no. 3 equally on each side of the previously mounted pair etc.

3 Possibility for demounting defect impellor springs.

4 The delivery roller is provided with cams (A) which bring the material through the spring adjusted rubber base. The cams are available in different designs for all types of material and dosages.
Great and many cams: Great amount (sand etc).
Small and less cams: Small amount (salt).

5 The delivery cams: If the cams are worn, they are to be replaced. If the screws are rustbound, the cams can be blasted with a hammer, and the screws be loosened with tongs. To ease a replacement of cams later, it is recommended to fill in approx. 1/4 l waste oil into the delivery roller. This has not been done from the works out of regard for the oil waste during shipment.

6 The rubber bases are jammed under the clamping iron and can be turned and worn on all edges provided that they are turned in time, see also description of the spring base.

7 The spring base presses the bottom rubber base against the cams of the delivery roller, regulated by the spring base adjustment. Defect springs by wearing are to be replaced. When the spring base is open, all points of the springs are to be in line.
The spring base stop is adjustable and placed in order to stop the movement of the spring base for max. material quantity.

8 Spring base adjustment: The adjustment is obtained by the pressure of the bottom rubber base with different strength against the delivery roller by means of the spring base. The pressure is varied by the adjustment handle at the rear of the spreader.

2.3.1 Technical data

Model	SKE8	SKE12	SKE15	SKE20
Hopper capacity, m^3	0,725	0,9	1,25	1,65
Total width, mm	1285	1665	1665	2195
Track gauge, mm	790	1160	1000	1530
Spreading width - min., mm	1008	1390	1390	1918
Rim size	4.00 E x 9	4.00 E x 9	5.50F x 10	5.50F x 10
Tyre size, 10PR	6.00 - 9	6.00 - 9	7.50 - 10	7.50 - 10
Tyre size, 12PR	6.00 - 9	6.00 - 9	7.50 - 10	7.50 - 10
Tyre size, 14PR	-----	-----	7.50 - 10	7.50 - 10
Net weight, kg	400	500	600	720
Permitted total weight, kg	1200	1500	2660	3500
Permitted shaft load capacity, kg	1000	1200	2100	2800
Supporting load on draweye, kg	200	300	560	750
Speed, km/h	30	30	30	30

2.3.2 Dimensioned sketch

SKE8, SKE12

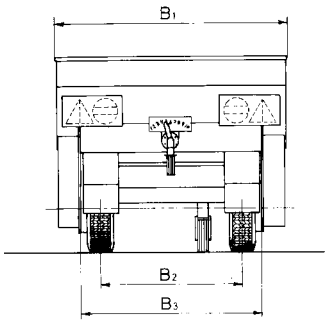

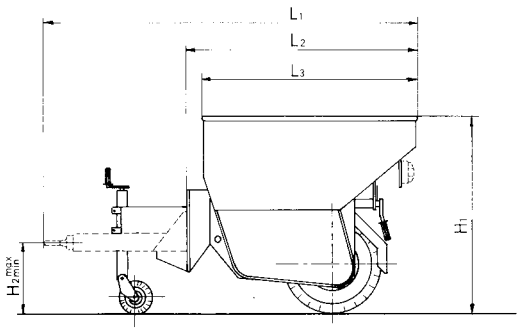

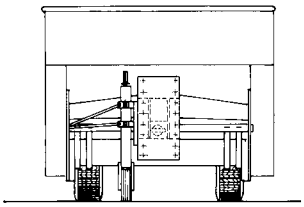

	B1	B2	B3	H1	H2 max	H2 min	L1 max	L1 min	L2	L3	V-m³
SKE-8	1285	790	1008	1080	715	385	2797	1651	1275	1220	0,725
SKE-9	1665	1160	1390	915	880	275	2762	1616	1240	1090	0,55
SKE-12	1665	1160	1390	1115	880	275	2762	1616	1240	1090	0,90

SKE15, SKE20

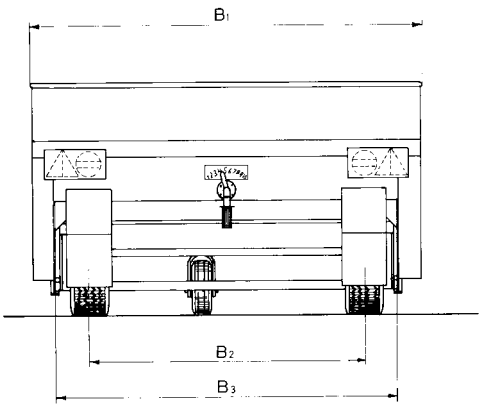

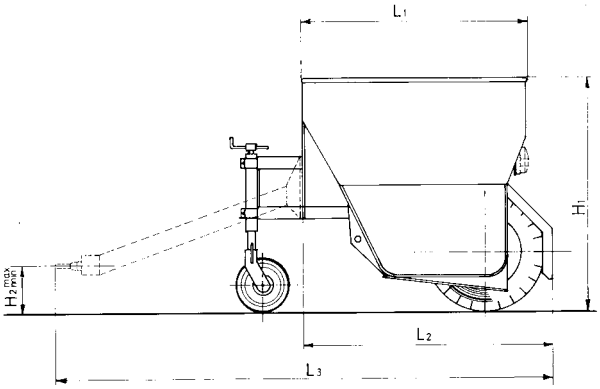

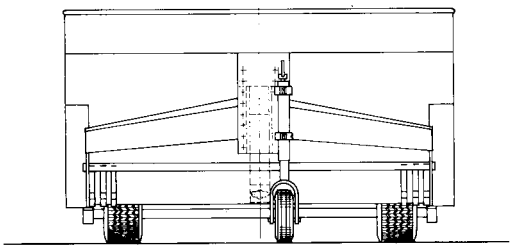

	B1	B2	B3	H1	H2 max	H2 min	L1	L2	L3 max	L3 min	V-m³
SKE-15	1665	1000	1390	1300	630	275	1275	1395	2945	1771	1,25
SKE-20	2195	1530	1918	1300	630	275	1275	1395	2945	—	1,65

2.4 Diagrams

2.4.3 Electrical diagram

Electrical diagram, see spare parts manual.

2.5 Corrosion protection

All Epoke-products were sandblasted with steel balls, zinc dusted with 1-component epoxyester (does not apply to non-corrosion-resistant components), first coated with 2-component polyurethan and varnished with 2-component polyurethan varnish.

3 Demands to the place of mounting

3.1 Demands to the bed plate

Important! The spreader is to be loaded off onto a solid, horizontal bed capable of bearing.

3.2 References to dangers which can be prevented by methods of mounting

Demands to the off-loading: The spreader is to be placed with adequate space around itself in order to carry out maintenance, lubrication, cleaning etc. comfortably and safely. The distance from the spreader to a stationary building must be at least 0.7 m, and between several spreaders the distance must be at least 1.1 m.

4 Instructions for preparations

4.1.1 Connection with the towing vehicle

1. Make sure that the spreader cannot roll backwards. Break blocks must be used on an even or very uneven surface or on a slope.
2. Adjust the stabiliser or supporting leg so that the towing vehicle hits the middle or just above the lowest part of the coupling on the vehicle.
3. There must be no persons between the spreader and the vehicle.
4. Coupling of spreader and vehicle. Replace the vehicle.
5. Once the coupling has been completed, check to make sure that it is correct.
6. Connect the supply cables (electricity).
7. Turn op the stabiliser/supporting leg.
8. Remove brake blocks.
9 Check spreader light.

4.1.2 Disconnection

1. Secure the spreader by using break blocks on an even or very uneven surface or on a slope.
2. Lower the stabiliser/supporting leg.
3. Disconnect supply cables (electricity).
4. Disconnect the spreader.
5. There must be no persons between the spreader and the vehicle.
6. Remove the vehicle from the spreader.

5 Operation instructions

5.0.1 Remote control

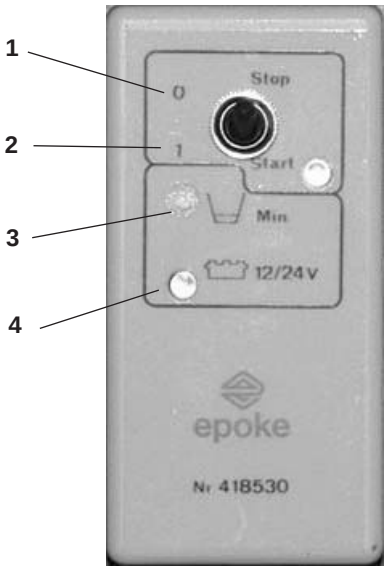

1. Spreading stop
2. Spreading - start
3. Material level indicator
4. Voltage control

5.1.5 Operating levers



As standard the spreader is supplied with manual remote control of clutch for delivery roller and impellor.
The handle is placed onto the left transmission box of the spreader.

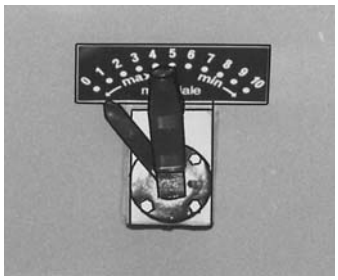

Quantity control: The quantity control is done in differring the pressure of the spring base against the delivery roller. The pressure is varied through the handle at the rear of the spreader.

5.2 Instructions for Initial Operation

5.2.2 Adjustment of spreading quantity (metering)

At metering or check of quantity per m^2 you must be aware that the width of the spread is 136% of the width of the delivery roller when the road speed is 20 km/h or above. The measuring tray corresponding to a width of spread of 1 metre must therefore be 1:1.36=0.735 m.

10 g/m^2 = 10 kg per driven km in measuring tray 0.735 m
20 g/m^2 = 20 kg per driven km in measuring tray 0.735 m
30 g/m^2 = 30 kg per driven km in measuring tray 0.735 m
40 g/m^2 = 40 kg per driven km in measuring tray 0.735 m

You may either hang the measuring tray up below the delivery roller and drive exactly 1 km. Or you may activate the wheel of the spreader and count the turns. In the latter case the following calculation must be made:

$$\text{Turns of wheel per km} = \frac{1000}{D \times \pi}$$

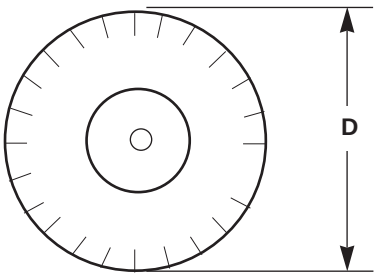

Ex.: D = 0,540 m $\quad \frac{1000}{0{,}540 \times 3{,}14} = 589$ turns per km

Gritting

Do not drive with engaged delivery roller without material in the hopper in order to prevent unnecessary wear of the rubber base.
If you wish to keep the marked width of spread the speed should not exceed 25 - 30 km/h. At greater speeds the width is increased through the wind, and widths of more than 6,0 m may be acheived.

5.4.2 Remote control

5.4.2.1 Correct installation

Direct current requirements for the electric control system of the spreader: 11V - 32V.
When switching between 12V and 24V vehicles, working lamp and rotating beacon must be switched accordingly.

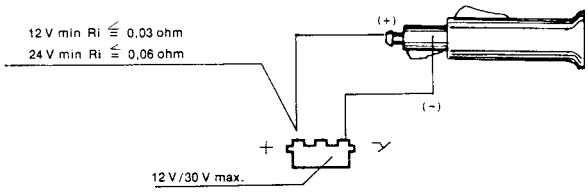

5.4.2.2 Connection of remote control

- The electric remote control is connected to the spreader by means of the multipoled plug on the remote control cable, and connect it to the socket on the spreader.
- Plug the power supplying cable into the universal plug on the vehicle (the lighter).

The remote control can be fastened in the cab using mounting hardware (optional equipment), which is the most suitable positioning for the remote control.

The remote control must be protected against the weather when the spreader and thus the remote control are not in use.

5.11 Procedure in case of failure

Problems	Cause	Remedy
1. Electric remote control out of order	1a. No power 1b. Fuse blown	1a. Connect power 1b. Replace the fuse
2. The spreader does not start when using the remote control	2a. No power on the system 2b. Bad connection in the 4-poled plug 2c. Engine defective	2a. See item 1. 2b. Clean/replace the plug 2c. Replace engine
3. The spreader does not start manually	3a. Scraper does not move/ eccentric does not turn 3b. Chain broken	3a. Check connections to start/stop handle/axle (tailstock screw has come loose – tighten) 3b. Mount a new chain
4. Defective light/indicator	4a. No power 4b. Bad connection in the 7-poled plug 4c. Bulb broken	4a. Check connections 4b. Clean/replace the plug 4c. Replace bulb

5.12 Instructions for repair and assembly

Replacement of delivery roller and impellor

The shafts are drawn sidewards out of the rear plates of the hopper. The holes are big enough to let through the delivery roller and the impellor mounted with cams and springs. Remember to loosen both allan screws in the flange bearings when the delivery roller and the impellor are dismounted. When mounting the delivery roller and the impellor the tallow string tightenings are to be connected carefully and the shaft ends to be wiped and greased. The chain wheels must also flush.

6 Maintenance

6.2.1 Cleaning

All Epoke spreaders have been sandblasted, zinc dust primed and primed before being painted with laquer, and they are therefore extremely well-protected against rust. However it is recommended - espescially after spreading salt and if there are longer pauses between operations - that the spreader is washed down with water after use.

Regular control extends the lifetime of the spreader and guarantees a safer function.

6.2.2 Maintenance

Cleaning remote control.
Clean the remote control with a slightly moistened cloth and wipe with a dry cloth.

Maintaining remote control.
Connectors and strain reliefs should be checked at regular intervals or at least every 100 operating hours. Defect connectors must be replaced.

All moving transmission parts and bearings should be lubricated with grease, see inspection list - mechanical item 6.3.1.

The driving shafts are suspended in spherical roller bearings with tightenings and in flange bearings. They should be greased only once a year. Over-greasing may spoil the tightenings. Likewise too much grease may cause the bearings to overheat.

Delivery roller and impellore are suspended in flange bearings by a laminated tightening. The bearings are greased at the factory and do not need much greasing, but for the sake of the tallow tightenings mounted behind a frquent greasing is recommended, at least after each 25 hours ‘ operating.

Spring base adjustment is lubricated through the lubrication nipple with grease, see inspection list - mechanical item 6.3.1

Defect cams are to be replaced. If the screws are rustbound, the cams can be blasted with a hammer, and the screws can be loosened with tongs. In order to avoid this, it is recommended, before use to loosen a cam and fill in approx. 1/4 litre waste oil in the delivery roller.

Impellors: Defect springs are to be replaced, see metering system item 2.2.4.

Spring base: Defect springs are to be replaced. When the spring base is wide open, the points of the springs must be in line.

Rubber base: The rubber bases are wedged in under clamping iron and can be turned and worn on all 4 edges, provided that they are turned in time.

Roller chains: Control that they are tightened. They shall be tightened in such a way that they by means tightening them totally.

Clutch: Free function is checked. Otherwise clean and grease all parts. When the spreader is engaged is engaged the pawl chamber, the pawl retainer and the pawl must turn free without touching the stripper. When the spreader is disengaged the pawl must be combletely in bottom.

6.2.3 Storing

After the winter season it is recommended that the spreader is cleaned, protected against corrosion, lubricated and has damages in the laquer repaired.

The spreader must be stored with an open (completely open) spring base.

Storing remote control
When not in use, the remote control should be stored in a dry place.

6.3.1.

Machine:	**Inspection list - mechanical**	Date: Signed:

Pos.	To be checked	Measure size and test size. Operational means and consumption means	Interval	Result of inspection	Comment
1	Flanged bearings: At the delivery roller and the impellor shaft	Ball bearing grease	25 h		
2	Tallow string packing: At the delivery roller and the impellor shaft		25 h		***
3	Delivery roller: Cams		50 h		Visual inspection. Worn cams to be replaced.
4	Impellor springs		50 h		Worn springs to be replaced
5	Rubber bases		50 h		The rubber bases are wedged in under the clamping iron and can be turned and worn on all edges - provided that they are turned in time.
6	Spring base		50 h		Visual inspection. When the spring base is wide open, the points of the springs must be in line. Worn springs to be replaced
7	Chain transmission: Roller chains		50 h		Check that the chains are tight. The chains must not, however, be firmly tightened.
	Rolling chain - lubrication	Wynn's Viscotene	50 h		Silicone spray grease
8	Wheel nuts	*140 Nm (14,0 kpm)	50 h		*Tightening moment
9	Air pressure	see tyre list	50 h		
10	Spring base adjustment	Grease	100 h		

*** The tallow string packing consists of a rubber collar in which the tallow string of 2 1/2 windings is pressed in between flange bearing and covering plate. When the flange bearing is mounted, the space between tallow string and flange bearing is filled withe grease, which supports the tightening effect of the tallow string. Lubrication is carried out with intervals of 25 hours of operation. If the grease penetrates into the hopper through the tallow string packing when lubricating, the tallow string should be replaced.

6.3.1.

Machine:	**Inspection list - mechanical**	Date: Signed:

Pos.	To be checked	Measure size and test size. Operational means and consumption means	Interval	Result of inspection	Comment
11	Coupling		100 h		Check that the ratchet is working freely, alternatively clean and grease all parts. When the spreader is connected, the ratchet chamber, ratchet holder and ratchet must move freely without touching the scraper. When the speeder is disengaged, the ratchet must be fully compressed.
12	Pawl for clutch	Lubricating oil	100 h		
13	Strickler	Lubricating oil	100 h		
14	Clutch lever	Lubricating oil	100 h		
15	Eccentric	Lubricating oil	100 h		
16	Stabiliser and support leg	Lubricating oil	100 h		
17	Nuts for drawbar	*120 Nm (12,0 kpm)	Before each season		*Torque moment
18	Greasing bearing (drive wheel axle)	Ball bearing grease	Before each season		
19	Salt spreading		During longer pauses in spreading		It is recommended that the spreader be flushed with water.

6.3.4 Grease

Grease:

Spreaders have been lubricated using Texaco products, either mineral lubricating grease or biological lubricating grease.

Mineral lubricating grease: **Texaco Texando CX EP 2.**

Biological lubricating grease: **Texaco Biostar Grease LC EP 2.**

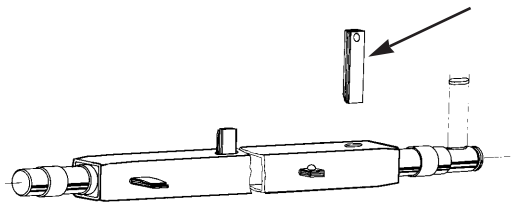

Impellor springs - See spare parts manual.

6.7 Reference to suitable spare parts

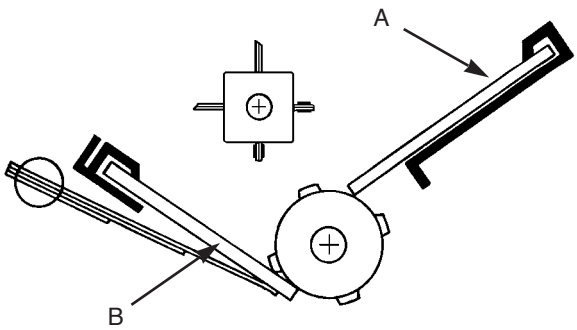

Rubber base 8x210 (A), 12x210 (B) - See spare parts manual.

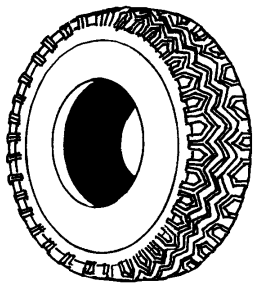

Tyres - See spare parts manual.

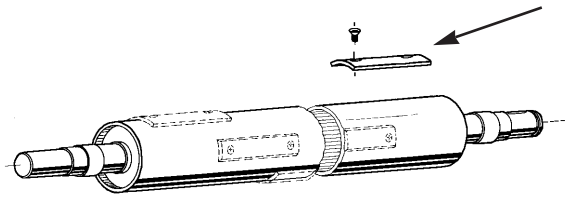

Cams - See spare parts manual.

7.1.2

Steadying wheel

Control at use (Visual inspection)

Inspection			Tested	
Date	Signed	Result	Date	Signed

7.1.6

Dry matter container Control at use (Visual inspection)				
Inspection			Tested	
Date	Signed	Result	Date	Signed

- Visual checks should include checks for exterior damage, deformities, wear and tear and corrosion.
- Implementing safety devices.

7.1.12

Draw bar

Control at use (Visual inspection)

Inspection			Tested	
Date	Signed	Result	Date	Signed

- TThe drawbar is adjustable in height.
  Important: When adjusting height, self-locking nuts must only be used once, i.e. always use new self-locking nuts. Nut (M14 DIN 985 A2) torque is 120 Nm.
- Do not perform subsequent changes on the drawbar, e.g. welding repairs.
- Check the driving gear for wear at regular intervals.
- Replace the bush at the “eye”. The bush may be replaced by rolling or pressing it in. Do not insert a bush by welding or tacking.

7.1.20 Tyre list

Mashine type	Ident. no:	Torque moment kpm	Size of tyre	Ply	Profile	Epoke no:	Air pressure at 50 km/h	
							bar	psi
TKG12	1101							
TKB9-280	1107		3.00-4"	6	T-991 impl.	82251314	7	101,5
TK12E	1210	14	6.00-9"	10	T-523	82251114	8,5	123,25
TK12E-275	1211	14	6.00-9"	12	T-523 HS	82251505	10	145
TKEB12	1301	14	6.00-9"	12	T-523 Steel-Belt	82253612	8,1	117,45
TKEB9-275	1306							
TMK10	1400	14	6.00-9"	10	T-523	82251114	8,5	123,25
TMK10-275	1405	14	6.00-9"	12	T-523 HS	82251505	10	145
TMK7	1404	14	6.00-9"	12	T-523 Steel-Belt	82253612	8,1	117,45
TMK7GT	1406							
TT10H2	1610		3.00-4"	6	T-991 impl.	82251314	7	101,5
TT10H6	1611	14	6.00-9"	10	T-523	82251114	8,5	123,25
TT10H2-275	1612	14	6.00-9"	12	T-523 HS	82251505	10	145
TT10H6-275	1613	14	6.00-9"	12	T-523 Steel-Belt	82253612	8,1	117,45
SW2000	2425		3.00-4"	6	T-991 impl.	82251314	7	101,5
		14	6.00-9"	6	T-523	82251002	2,2	31,9
CS1000	1507	14	6.00-9"	10	T-523	82251114	8,5	123,25
CS1000 MKII	1510	14	6.00-9"	12	T-523 HS	82251505	10	145
CS1000 MKIII	1511	14	6.00-9"	12	T-523 Steel-Belt	82253612	8,1	117,45
SKE8	1001	14	6.00-9"	10	T-523	82251114	8,5	123,25
SKE12	1003	14	6.00-9"	12	T-523HS	82251505	10	145
		14	6.00-9"	12	T-523Steel belt	82253612	8,1	117,45
SKE15	1004		4.00-4"	6	T-991	82251435	7	101,5
SKE20	1005	14	7,50-10"	10	T-523	82251071	6,5	94,25
		14	7,50-10"	14	T-523HS	82251501	9	130,5
		14	6.00-9"	6	T-523	82251002	4,3	62,35
		14	6.00-9"	12	T-523HS	82251505	10	145
ITM35	1501		4.00-8"	6	T-49 HS	82251278	5,2	75,4
ITM45	1502		155/70R-13"		75 Q M+S	82250006	2,2	31,9
ITM60	1503							
Epomini 5			2.00-16"		VM 100	82256258	2,5	36,25
Epomini 20			2.75-17"		VM 100	82256299	2,75	39,875
IGLO S2400	2490		18x8.0-10			82250008	6	87
	2491		185-R14"	8	P75	82250001	4,5	65,25
	2492		185-R14"	8	P75	82250001	4,5	65,25
	2493		18x8.0-10			82250008	6	87
	2494		185-R14"	8	P75	82250001	4,5	65,25
	2495		185-R14"	8	P75	82250001	4,5	65,25
TS1000	1551	9	185QR-14"		P75	82252279	3	43,5
		9	185-R14"	8	P75	82250001	3	43,5
TS1000	1552	9	215/75R-17,5"		L71	82250005	8,5	123,25
PW803H	3105	10,5	155/70R-13"		75 Q M+S	82250006	1,5	21,75
PW23H	3130							
SWxxxx		14	185R-14"		MS PLUS 3 Q	82252279	1,5	21,75
EpoJet								
PWV87								

8.1

EC Declaration of Conformity for machinery

Manufacturer:	Epoke® A/S
Address:	Vejenvej 50, Askov DK-6600 Vejen

Herewith declares that

Manufacture:	Epoke
Model:	Tow-behind spreader
Type:	SKE
Trade designation:	SKE8 SKE12 SKE15 SKE20
Ident. no., from:	10010200 (SKE8), 10030200 (SKE12) 10040200 (SKE15), 10050200 (SKE20) (first 4 digits are type designation, the last 4 digits are continuous numbering)
Year, from:	1999

- is in conformity with the provisions of the Machinery Directive (Directive 98/37/EEC), as amended and with national implementing legislation.
  If this machine is modified, without our prior approval, this declaration will be rendered invalid.

- is in conformity with the provisions of the following other EEC directives:

  (89/392/EEC, 91/368/EEC, 93/44/EEC, 93/68EEC)

and that

- the following (parts/clauses of) harmonized standards have been applied:

  EN292-1:1991, EN292-2:1991/A1:1995, EN294:1992, EN349:1993, EN811:1996, EN 953:1997, EN1037:1996, EN 1050:1997, EN1088:1996, prEN13021:1997

Askov, 2003.04.10

Jørn Christensen
Manager

8.4 Certificate of Quality Management System *(ISO 9001)*

This quality management system is a very important requirement in order to assert oneself in international trade and frequently also in order to participate in open tenders.
The company has held the certificate since April 21, 1993, and it is applicable to the Epoke product range, including grass mowers, spreaders, sweepers, snow ploughs, which have all been subject to ISO 9001 testing.

CERTIFICATE OF APPROVAL

This is to certify that the Quality Management System of:

Epoke® A/S
Vejenvej 50, Askov
6600 Vejen
Denmark

has been approved by Lloyd's Register Quality Assurance to the following Quality Management System Standards:

ISO 9001:1994

The Quality Management System is applicable to:

Design, development, production, sales and servicing of grass mowers and equipment for icy road control on roads and in airports.

Approval
Certificate No: 924876

Original Approval: 21 April 1993
Current Certificate: 5 April 2002
Certificate Expiry: 14 December 2003

Lloyd's Register Quality Assurance Cologne

UKAS QUALITY MANAGEMENT 001 RvA Deutscher Akkreditierungs Rat DAR TGA-ZM-02-91-00

This approval is carried out in accordance with the LRQA assessment and certification procedures and monitored by LRQA.
The use of the UKAS Accreditation Mark indicates Accreditation in respect of those activities covered by the Accreditation Certificate Number 001
Mayor Revision 6

9 Overview of standards

EUROPEAN STANDARD

EN 292-1 : 1991
Safety of machinery - Basic concepts - General principles for design - Part 1: Basic terminology, methodology.

EN 292-2 : 1991/A1 : 1995
Safety of machinery - Basic concepts, general principles for design - Part 2: Technical principles and specifications.

EN 294 : 1992
Safety of machinery - Safety distances to prevent danger zones being reached by the upper limbs.

EN 349 : 1993
Safety of machinery - Minimum gaps to avoid crushing of parts of the human body.

EN 418 : 1993
Safety of machinery - Emergency stop equipment, functional aspects - Principles for design.

EN 811 : 1996
Safety of machinery - Safety distances to prevent danger zones being reached by the lower limbs.

EN 953 : 1997
Safety of machinery - Guards - General requirements for the design and construction of fixed and movable guards.

EN 1037 : 1996
Safety of machinery - Prevention of unexpected start-up.

EN 1050 : 1997
Safety of machinery - Principles for risk assessment.

EN 1088 : 1996
Safety of machinery - Interlocking devices associated with guards - Principles for design and selection.

EN 60204-1 : 1998
Safety of machinery - Electrical equipment of machines - Part 1: General requirements.

20 Index

A
Abnormal use, 4
Adjustment of spreading quantity (metering), 14
Before driving, 6

C
CE-mark, 3
Certificate of Quality Management System, 24
Certificates, 23
Cleaning, 15
Connection of remote control, 14
Connection with the towing vehicle, 13
Control and test sketch, 19
Copyright, 2
Correct installation, 14
Corrosion protection, 12
Country of origin, 3

D
Demands to the bed plate, 13
Demands to the place of mounting, 13
Descriptions, 4
Diagrams, 12
Dimensioned sketch, 12
Directives applied, 3
Disconnection, 13
Dosage system, 9
Draw bar, 21
Dry matter container, 20

E
Electrical diagram, 12
Electrical hazard, 4
EU certificate of conformity, 3, 23

G
General safety measures, 5
General, 4
Grease, 18

H
Handling, 4
Hazard caused by materials and substances, 5
Hazard caused by noise, 5
Hazard caused by radiation, 5
Hazard caused by vibrations, 5
Hazards presented by the machine, 4

I
Identification, 2
Information on restrictions on use, 4
Inspection list – mechanical, 16
Inspection lists and overviews, 16
Instructions for Initial Operation, 14
Instructions for repair and assembly, 15

L
Lubricating grease, 7

M
Machine overview, 8
Maintenance, 15
Manufacturer and supplier, 2
Mechanical hazard, 4
Model and type specification, 3

N
Normal use, 4

O
Operating levers, 13
Operation instructions, 13
Overview of standards, 25

P
Personal protective measures, 4
Procedure in case of failure, 15
Product description, 8

Q
Quality system certificate, 3

R
Reference to permitted total weight, 5
Reference to safety measures for specific operating conditions, 6
Reference to suitable spare parts, 18
References to dangers which can be prevented by methods of mounting, 13
Remote control, 13, 14
Rules for total weight of towed vehicles, 4

S
Safety measures, 5
Safety measuresWork safety, 6
Sikkerhed ved rengøring, reparation og vedligeholdelse, 6
Standards applied, 3
Start no. and date, 3
Steadying wheel, 19
Storing, 15
Suggestions for a user guide, 7

T
Technical data, 11
Technical documentation, 2
Thermal hazard, 5
Transport and handling, 4
Tyre list, 22

W
Warranty and liability, 2
Work