Sandvik TH430
Pure Performance



The Sandvik TH430 is a narrow 30 tonne underground mining truck that sets new standards in safety, reliability and productivity. Designed for service efficiency and maximum 'up-time', unsurpassed performance can be expected in medium sized operations, on the level or on grades up to 20%.

Key Features

- Smallest envelope in 30 tonne class provides high maneuverability.
- Low exhaust emission engines reduce ventilation requirements.
- VCM electronic control system for ease of operation and trouble shooting.
- 50/50 loaded weight distribution for smooth haulage.
- ROPS/FOPS certified, high comfort cabin for operator safety and performance.

SANDVIK

DIMENSIONS

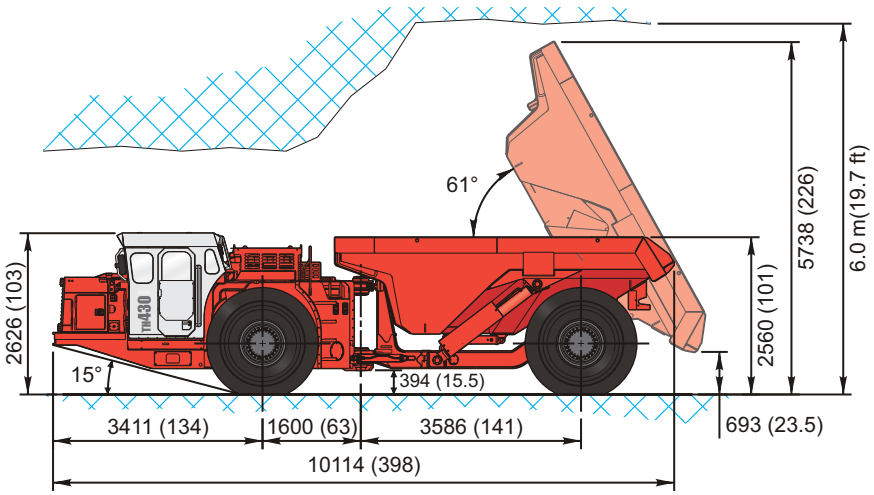

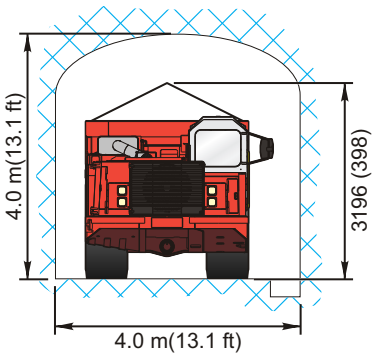

DIMENSIONS (TOP VIEW)

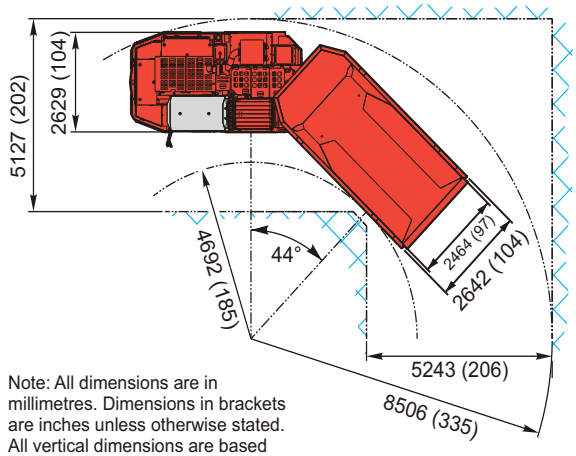

Note: All dimensions are in millimetres. Dimensions in brackets are inches unless otherwise stated. All vertical dimensions are based on an unloaded vehicle.

PRODUCTIVITY CURVE

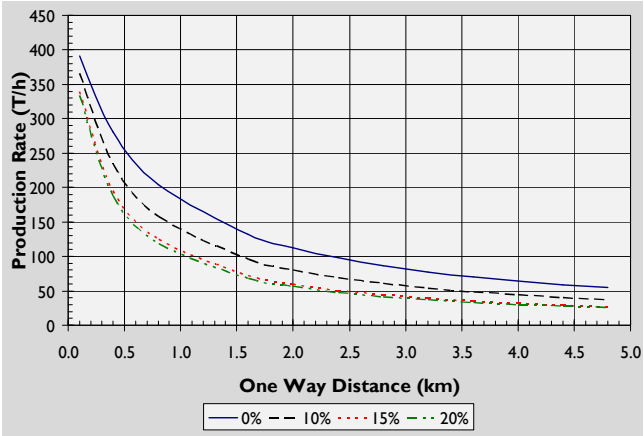

SPECIFICATIONS

Main Components

- Volvo TAD1251VE. Output 293 kW (393 HP)@1800 RPM
- Dana SOH 8000 torque converter
- Dana SOH 6000 transmission with electric shift
- Kessler D91 front axle with standard differential, oscillating ± 9°
- Kessler D91 rear axle with standard differential, fixed
- 26.5 R25 E4 tires

Capacities

Payload	30 tonnes	33 tons
Dump box volume	14.5 - 18.0 m³	19.0 - 23.5 yd³

Dump Box Motion Times

Discharging time	14 sec.
Dumping angle	61 °

Vehicle Weights

Total operating weight	28 830 kg	63 559 lb.
Total loaded weight	58 830 kg	129 698 lb.
front axle	29 436 kg	64 895 lb.
rear axle	29 394 kg	64 803 lb.

Loaded Gradeability (2% Rolling Resistance)

Grade %	1st Gear km/h	1st Gear mph	2nd Gear km/h	2nd Gear mph	3rd Gear km/h	3rd Gear mph	4th Gear km/h	4th Gear mph
0%	6.0	3.7	10.4	6.5	18.3	11.4	32.3	20.1
5%	5.9	3.7	10.3	6.4	17.2	10.7		
10%	5.7	3.5	9.9	6.2	8.6	5.3		
15%	5.5	3.4	6.5	4.0				
20%	5.4	3.4	4.5	2.8				

Sandvik is a registered trademark of the Sandvik Group
© 2011 Sandvik