Construction

Aliva®-252

Concrete Spraying Machine

Description

The Aliva-252 is a sturdily constructed two-axle concrete spraying machine for the processing of dry mix.

Uses

The machine can be used thanks to its compact design and mobility where space is at a premium e.g. in mines and galleries. Other potential applications are slope and hillside protection, lining of water tanks and swimming pools, guniting for single and double shell tunnel construction, backfilling of tubbings.

The Aliva-252 is available in the following versions:

- BASIC
  Electric drive, combined with BASIC-Dosing unit (not synchronized)
- AIR
  With air drive, combined with BASIC-Dosing unit (not synchronized)

Technical data

Dimensions

With chassis

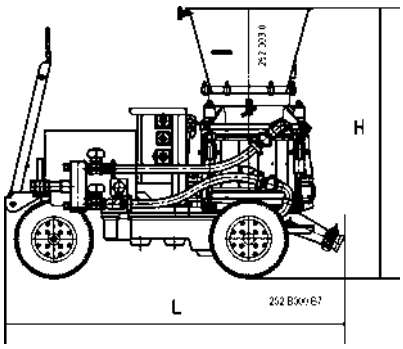

Length L	
with rotor 10 L	1770 mm
with rotor 16L	1720 mm
Width	800 mm
Height H	
with rotor 10 L	1310 mm
with rotor 16 L	1410 mm
Weight	approx. 760 kg
Content of hopper	85 liters

With skid

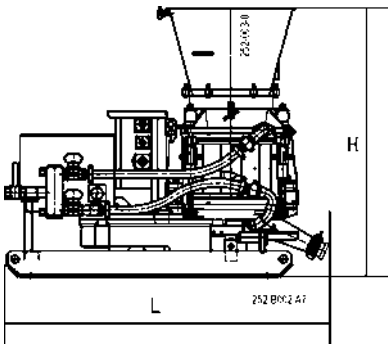

Length L	
with rotor 10 L	1640 mm
with rotor 16 L	1590 mm
Width	800 mm
Height H	
with rotor 10 L	1260 mm
with rotor 16 L	1360 mm
Weight	approx. 800 kg
Content of hopper	85 liters

Drive

Electric (BASIC)		With air motor (AIR)	
Motor output	4.4 kW	Motor output	7,5 kW
Speed range	1500 rpm	Speed range	900-2000 rpm
Voltages	400 V 50 Hz	Pressure	4,5 bar
	400/440V 60 Hz	Air consumption	9 Nm³/min.
	220 V 50 Hz		
	220 V 60 Hz		
Protection	IP 55		

Theoretical conveying

Conveying (only dry)

Rotor L	Hose Ø mm	Conveying output *m³/h		max. grain mm	max. conveying distance (m) horizontal / vertical
		BASIC	AIR		
10	50	5	3.5-7	16	300/100 m**
16	60	8	5,5-11	20	

* *with theoretical filling degree of 100%, if motor with 60 Hz = 20% higher conveying capacity.*

** *more than 80 m conveying distance, use steel tubes.*

Theoretical air consumption

Hose Ø mm	Air consumption Nm³/min. ***	
	Dry spraying	
	60 m	120 m
50	8	10
60	11	13,5

*** *Air consumption data are approximate values and are depending on conveying output, conveying distance and hose diameter.*

Caution:
For the configuration AIR (with air motor) it has to be considered:
Total air consumption = Air consumption for conveying + Air consumption for air motor!

1 Nm^3/min = 35 cfm

Safety instructions

Important safety regulations

For detailed informations please consult the latest edition of the machine operating manual.

Construction

Legal references

Information given, in particular suggestions made for use and application of our products are based on our current knowledge and experience in the normal case at the time of printing. In practice, the difference in materials, substrates and enviromental conditions can cause deviation from this information.
Sika guarantees for its products the compliance of technical characteristics according to the Technical Data Sheets up to expiry of shelf life. Users of the products must always consult the latest edition of Technical Data Sheet under «www.sika.ch/stm». Our current General Conditions are applicable.



Aliva-252 BASIC

Certified Management System ISO 14001 since 1997

Certified Quality System ISO 9001/EN 29001 Reg.-Nr. 10553-03 since 1986

Sika Schweiz AG
Tunneling & Mining
Tüffenwies 16, P.O Box
CH-8048 Zürich

Phone +41 56 649 31 11
Ordering
Chemistry 0800 85 40 40
Machines 0800 85 40 41