ACK 20-0001
ACK 20-0002

C.P.-DANARM

PORTABLE PNEUMATIC DRIVEN UNIVERSAL CHAIN SAW

MADE IN ENGLAND

LIST No. Z42

FIRST ISSUE, NOVEMBER, 1953

FOREWORD

You have purchased a precision machine designed and constructed to be as reliable and efficient as engineering skill can make it.

Treat it with every care since it is liable to damage if misused or neglected. The length of its useful working life is almost entirely dependent upon the methods of use and maintenance especially when new.

It is delivered to you mechanically perfect and it is therefore imperative that you read carefully the instructions outlined in this Manual.

The operating instructions contained in the following pages are intended to serve as a useful guide, but are not binding in detail regarding machine design.

For long life and dependable service, be sure to take good care of your CP-Danarm Chain Saw.

If you require service or spare parts write to :

J. CLUBLEY ARMSTRONG DANARM LTD.
Abford House, Wilton Road, London, S.W.1.

LIST No. Z42

INSTRUCTIONS FOR OPERATING THE

C.P.-DANARM

PORTABLE PNEUMATIC DRIVEN UNIVERSAL CHAIN SAW

Danarm Saws are made under one or more of the following Patents and/or Patents Pending :—
561788 359956 554883 568988 578824 578825 578826
Australian Patents 115178 ; 124147 New Zealand Patent 84567 Canadian Patent 409076 South African Patent 120/41

J. Clubley Armstrong Danarm Ltd., Abford House, Wilton Road, London, S.W.1

Tel.: Victoria 2785 and 4880. **Works: Lightpill, Stroud, Glos.**

FIRST ISSUE, NOVEMBER, 1953

GENERAL DATA

Air Motor	Consolidated Pneumatic Model No. 330
Working Pressure	80-100 P.S.I.
Air Consumption	50 cu. ft. at 80 P.S.I.
H.P. Developed	3
Max. Motor R.P.M. ..	6,000
Gear Reduction	4-1
Chain Sprocket R.P.M. ..	1,500
Cutting Chain	Danarm Chipper type. Length 16″ and 23″.
Cutter Bar	Solid Pattern with Hardened Chain Track. Lengths 16″ and 23″.

Note. Saws are supplied with cutter bars for 23″ cutting width as standard—unless otherwise specified on order.

LUBRICATION

Air Motor	Use Shell-Mex Clavus Oil 17 (Service Grade OM13).
Gear Box	Use Shell Mytilus Grease A or Shell Retinax CD (Service Grade LG320 Grease).
Cutting Chain	Use Shell-Mex Clavus Oil 17 (Service Grade OM13).

List of Tools and Accessories

Part No.	*Description*	*No. req.*
AT.1	Ring Spanner $\frac{3}{8}$″ B.S.F. x $\frac{3}{16}$″ B.S.F.	1
AT.5	$\frac{1}{4}$″ whit. Capscrew Key	1
B.6	Sharpening File	1
AT.7	Anvil Block	1
AT.8	Chisel	1
AT.9	Punch	1
T.2	Hammer	1
T.10	$\frac{5}{16}$″ B.S.F. x $\frac{1}{4}$″ B.S.F. Spanner	1
T.17	Screwdriver	1
T.18	$\frac{3}{8}$″ whit. Capscrew Key	1
Z.43	$\frac{1}{4}$″ whit. C/sk. Hd. Socket Screw Key	1
Z.44	$\frac{3}{16}$″ whit. C/sk. Hd. Socket Screw Key	1
Z.45	4 B.A. C/sk. Hd. Socket Screw Key..	1
Z.42	Instruction Booklet	1
F.5596	Grease Gun	1
T.32	Tool Bag	1
*T.31	Oil Can..	1
*A.122a	Felling Dog	1
*A.161	Helpers' Handle	1
	Each chain includes as spares :	
B.4	R.H. Cutter	2
B.2	L.H. Cutter	2
B.3	Centre Link	2
B.1	Side Link	2
A.3	Rivets	12

Items marked thus * are issued to Special Order Only.

THE CHAIN SAW

Unpacking the Machine

The CP-Danarm Universal Chain Saw is packed in a case, a parts list also being enclosed. Take care when unpacking that small parts are not lost. Keep the cases together with packing materials, until the machine is assembled and in working order. Place all parts on the floor, or any clear space, check according to the enclosed parts list and clean thoroughly.

Assembling the Machine

The machine is despatched with the cutter bar and saw chain detached from the main unit. Assemble by reference to the illustration at the back of this booklet. Note that the cutting teeth must point towards the machine on the bottom side of the cutter bar.

OPERATING INSTRUCTIONS AND LIST OF PARTS FOR TYPE II SAW CHAIN TENSIONER

Adjusting Cutting Chain Tension

Before making any adjustment check that spigot end on A.210 enters tensioning hole in Cutter Bar.

Existing Cutter Bars not provided with tensioning holes may be modified by drilling these holes as illustrated overleaf.

For adjusting the tension on the chain the clamp nuts (A.83) should be only finger tight (see illustration for location). Apply tension to the chain by rotating the tensioner setscrew (A.211) clockwise with the screwdriver (T.17) provided in the tool kit, and finally lock the clamp nuts (A.83) tightly with the ring spanner (AT.1).

A new saw chain will stretch considerably and requires frequent tensioning after trial cuts. Never run the machine with a slack chain or damage to sprocket, cutter bar and chain will result.

Tensioning may be required eight or ten times on a new machine, and when correctly adjusted the chain should lift about $\frac{1}{4}$" from the cutter bar in the centre position.

Part No.	*Description*	*No. req.*
A.208	Tension Clamp	1
A.209	Felling Dog Capscrew	2
A.210	Chain Tension Spigot	1
A.211	Tensioner Setscrew	1
A.212	Slotted Nut for setscrew	1
A.213	Split Pin for slotted nut	1
A.214	Cutter Bar Key	1
A.14Z	Abutment (Pneumatic Saw)	1
A.163	Clamp Setscrew	2
A.83	Clamp Setscrew Nut	2
A.82	Clamp Setscrew Lock Washer	2
A.165a	14" Cutter Bar	1
A.1a	22" Cutter Bar	1
P.86a	30" Cutter Bar	1
D.38	Washer for setscrew	2
A.122a	Felling Dog (if required)	1

see page 4

When Type II saw chain tensioner is fitted the following existing parts are affected :—

Pneumatic Saw

Items A.1, A.10, A.12, A.14M, A.21, A.22, A.82, A.87, A.116, A.117, A.153, A.163, A.165, are deleted. Item A.83, now reads 2 off.

Lubrication of Cutting Chain

Lubrication to the cutting chain is automatic, utilising pressure drawn from the air motor. The handlebar frame (Z.5) acts as the lubricating oil tank and the oil filling cap (A.38) must be screwed pressure tight against the washer (A.39) so that when the air motor is running and oil tap (A.40) is open, oil is fed to the cutter bar. Occasionally sawdust may choke the oil entry to the cutter bar, and to overcome this a hand plunger pump (A.92) is provided on the abutment (A.14Z). Depressing the plunger several times will move the obstruction and feed an additional quantity of oil to the cutting chain. During the cutting operation it is advantageous to operate this plunger occasionally. **Never run the chain in a dry condition** or the cutter bar, chain links and rivets will become badly worn. "Over oil" the chain rather than "under oil" it. If the pressure feed pipe Z.37 from the air motor drive housing requires cleaning, remove same by unscrewing tube nuts at either end, and poke through with a small wire to remove the obstruction. A similar operation can be carried out on oil feed pipe Z.36 although in this case the oil should be drained from the handlebars prior to removal of pipe.

DANARM PNEUMATIC SAW TYPE II SAW CHAIN TENSIONER

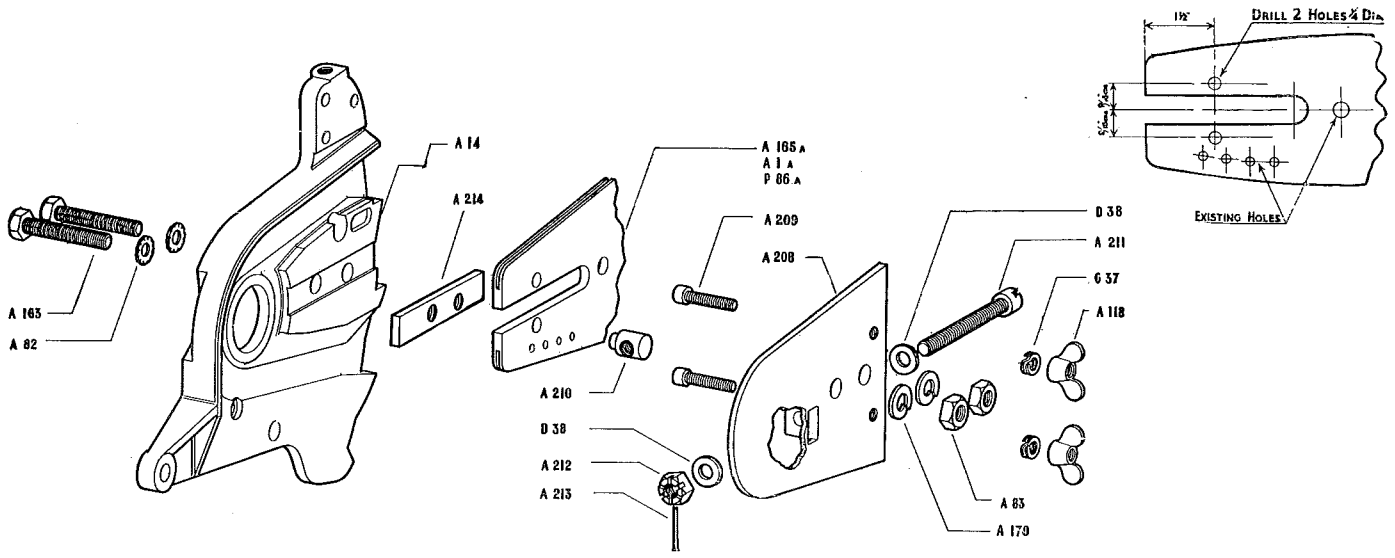

Filling the Oil Tank

Unscrew filler cap (A.38) with its washer (A.39) and fill approx. $\frac{1}{3}$ pint with oil as recommended on page 2. To avoid being lost, oil filler cap is retained in oil tank with wire and spring clip.

The Air Motor

Clean compressed air supply is essential and compressor air inlet pipes should be placed where they cannot draw in dust or dirt of any description. Hose pipes when disconnected from air motor should not be allowed to fall on the floor where grit may lodge in the connector and subsequently be blown into the air motor. This is a frequent cause of trouble and it is recommended that air be blown through hose pipe to remove any foreign matter before connecting up to air motor.

Keep air mains and receiver well drained. Piping arrangements influence condensation and the presence of moisture in compressed air.

Each day before use inject a few drops of oil as recommended on page 2 into the air inlet and when in continuous service this should be repeated every hour. The throttle valve ports will thus receive proper lubrication when air is turned on. Too heavy a grade or too much oil may cause sluggishness in operation.

To fill the air motor reservoir remove the filler cap marked **"light oil daily"** and use the recommended grade of oil. See page 2.

Zerk fittings are fitted at proper grease lubrication points where grease as recommended on page 2 should be added weekly, three shots from grease gun should suffice. Do not pack cases completely full of grease or overheating will result.

Do not leave the air line connected to motor overnight. Do not run saw light with open throttle. Stop motor when carrying saw.

Lubrication of Gear Box

Always use Recommended Grease (see page 2) to fill gear box. Remove filler cap A.38 and insert charge with grease gun. Check quantity of grease occasionally, and if necessary add a further charge to make up wastage. The initial filling is made by the manufacturer.

Care of the Chain Saw

Clean the chain with paraffin after each day's work. Brush off all dirt and wood chips and oil the chain thoroughly with an oil can until penetration into the links and rivets is assured. Oil cans T.31 are available if required (see Tool List). It is advisable to store the chain in an oil bath when not in use or alternatively first immerse in oil and hang over a wooden peg.

Sharpening the Chain Links

The saw chain teeth have alternate right and left hand sets, and sharpening should be carried out as soon as the cutting edges show signs of becoming dull. It is recommended to sharpen "little and often".

A special file (B.5) is supplied in the tool kit for sharpening purposes.

If required a special bench mounting clamp can be supplied for filing chain.

The teeth in the chain are disposed in sets of right and left hand cutters, and the height of both right and left hand cutters should be .036 above the top of the depth gauge at the front of each cutter.

This difference in height between the teeth should be maintained on the chain throughout its cutting life, and when new links are fitted these should be adjusted to correspond with the other links in the chain otherwise irregular cutting will result.

It is only necessary to file the front of the teeth. The top of the cutting teeth should on no account be filed unless serious damage has been caused by nails or other foreign bodies in the timber.

After sharpening, clean off all emery dust or filings and re-oil the chain.

Points on Sharpening

(see Fig. 4).

1. Do not sharpen the tops of the chain, otherwise the height and set of the chain will be reduced.
2. When you sharpen, do all the teeth **in front only.**
3. Do not keep the left or right teeth higher than the others. Inequalities of the right or left will result in oblique cutting of the chain.
4. Do not work with the chain either too tight or too slack.
5. Do not continue working with blunt chain. If edges show slight signs of bluntness, stop work and touch up with file. **FIG. 3**

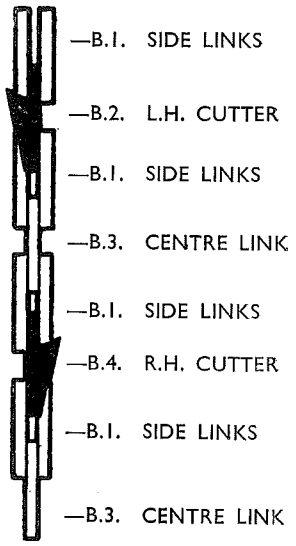

Replacing Chain Links

Chain link rivets should be examined each time the chain is removed, and if necessary re-riveted, using the hammer T.2 provided. To remove rivets from the chain first file off the heads on both sides. Place the chain in the groove of the anvil block (AT.7) and split the links apart using chisel (AT.8).

Rivets can then be knocked out of links using the flat base of the anvil block with the **large holes** at the top. To fit new rivets, insert two rivets in the **small holes** on the anvil base, place one link over the rivet ends, and rivet tightly together with the hammer.

Join up chain, place side plate on rivet ends, and form heads on the rivets with the hammer.

For the correct chain sequence refer to Fig. 3.

Cutter Bar

The cutter bar on this machine is provided with a hardened track for the chain to run in and no further treatment is necessary throughout its life, other than adequate lubrication. Bars are available in standard lengths of 16″ and 23″, with chain to correspond. See page 2.

Cutter bars are reversible and should be turned over when wear of the chain track is noticed.

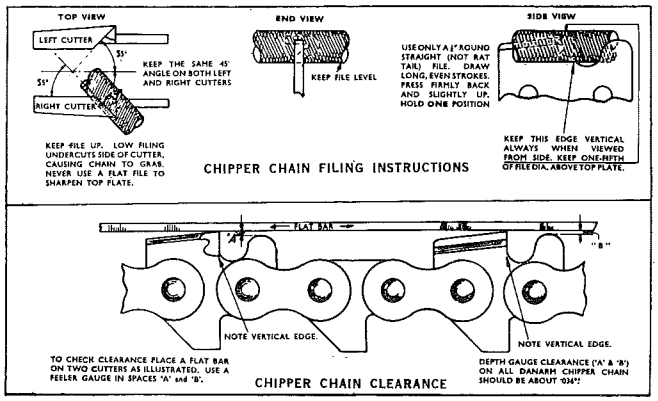

FIG. 4

Storing the Machine

All bright parts on the machine are given protective coating against rust, but these should occasionally be given a thin coating of grease to prevent corrosion. (Shell "Ensis Fluid 256" is ideal for this purpose.)

Spares Orders

When ordering spares or writing with regard to the machine, always quote the machine number together with any prefixed letters. This number is on the nameplate attached to the air motor. If further information is required for the purpose of dismantling, or repair, which is not contained in this booklet, please consult us and we will render all possible assistance.

Identification List of Parts

Part No.	SAW PART NUMBERS (*see Fig.* 5) *Description*	*No. req.*
A.1a	Cutter bar 23″ (normal fitment)	1
A.3	Link rivets (spare)	12
A.11a	Anchoring capscrew	1
A.14Z	Abutment	1
A.23	Cork oil joint	1
A.24	Guard bar	1
A.25a	Sealing ring oil pump	1
A.28	Spring	1
A.29	Oil metering screw	1
A.30	Oil metering screw gland nut	1
A.31	Oil metering screw packing washer	1
A.32	Sprocket	1
A.32a	Sprocket lock washer	1
A.38	Gearbox grease filler plug	1
A.39	Handlebar oil filler plug washer	1
A.39	Gearcase grease filling plug washer	1
A.40	Oil tap complete with A.90 and A.91	1
A.82	Clamp setscrew lock washer	2
A.83	Nuts for guide clamp bolt	2
A.83	Nuts for fixing bolts	2
A.85	Front and rear spacer shims	As required
A.86	Sprocket, gear and pinion shaft shims	As required
A.88	Guard bar set screw (short)	2

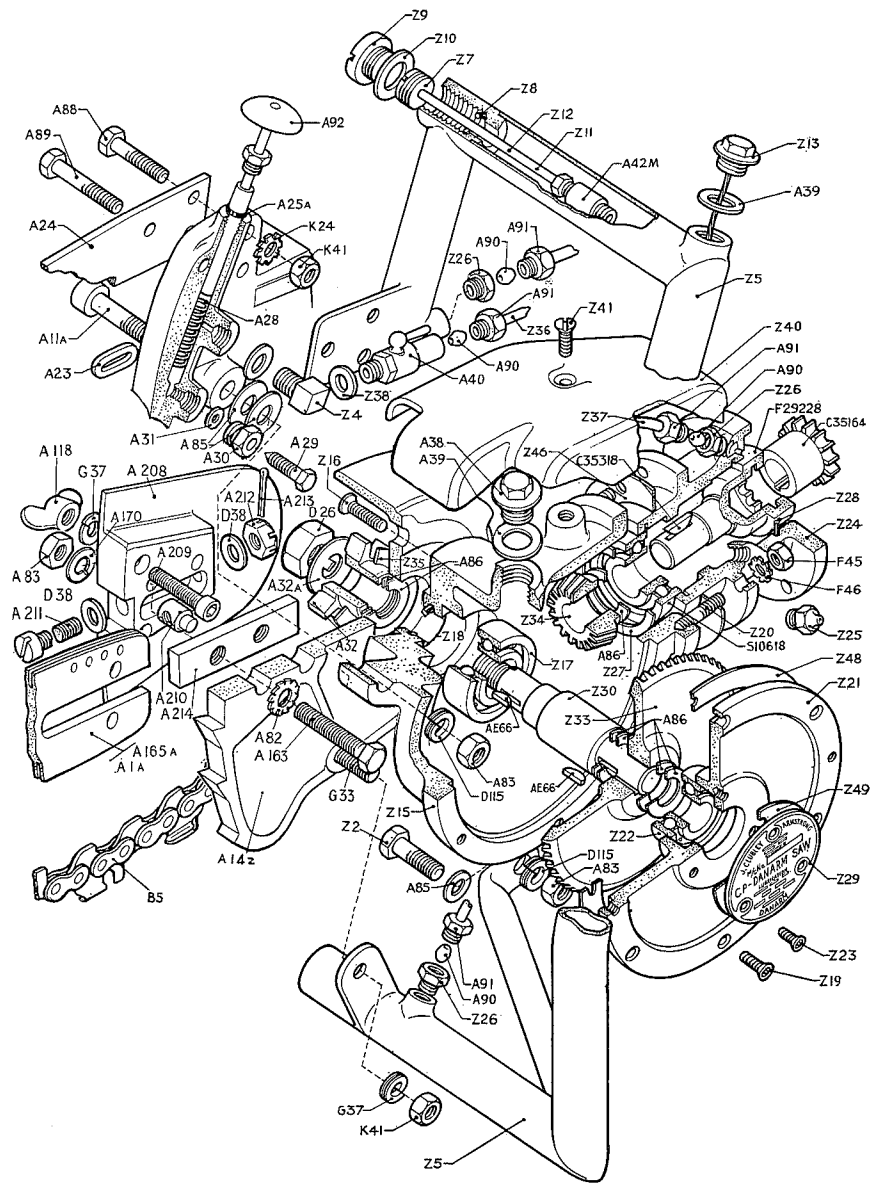
Z9
Z10
Z7
Z8
Z12
Z11
A42M
Z13
A39
A88
A89
A92
A25A
K24
K41
A24
A91
A90
Z26
Z5
A91
Z41
Z36
A28
A11A
A23
A90
A40
Z38
Z4
Z40
A91
A90
Z26
F29228
C35164
Z37
A31
A85
A30
A29
Z16
A38
A39
Z46
C35318
A118
G37
A208
A212
A213
D38
D26
A170
A209
Z28
Z24
F45
F46
A83
D38
A32A
Z35
A86
A211
Z34
Z20
S10618
Z25
Z18
A32
Z17
A86
Z27
Z48
Z21
Z30
A210
A214
Z33
A86
AE66
A82
A163
A165A
A1A
A83
D115
AE66
Z49
G33
Z15
Z2
Z22
D115
A83
A14z
B5
A85
Z29
Z23
Z19
A91
A90
Z26
G37
K41
Z5

FIG. 5

Saw Part Numbers—*continued*

Part No.	*Description*	*No. req.*
A.89	Guard bar set screw (long)	1
A.92	Oil pump plunger (with nut and knob)	1
A.118	Wing nuts for guide clamp	2
A.163	Clamp setscrew	2
A.165a	16″ cutter bar (alternative to A.1a)	1
A.170	Spring washer	2
A.208	Tension Clamp	1
A.209	Felling Dog Capscrew	2
A.210	Chain Tension Spigot	1
A.211	Tensioner Setscrew	1
A.212	Slotted Nut for setscrew	1
A.213	Split Pin for slotted nut	1
A.214	Cutter Bar Key	1
B.1	Side Link (spare)	1
B.2	L.H. cutting link (spare)	1
B.3	Centre Link (spare)	2
B.4	R.H. cutting link (spare)	1
B.5	Complete chain (state cutter bar size)	1
D.26	Sprocket retaining nut	1
D.38	Washer for setscrew	2
D.115	Lock washer	2
F.45	Drive housing retaining nut	6
F.46	Drive housing retaining nut lock washer	6
G.33	Handlebar cap screw	1
G.37	Handlebar cap screw lock washer	1
G.37	Guide clamp lock washer	2
K.24	Guard bar screw lock washer	6
K.41	Nuts for Guard Bar Screws	3
K.41	Nut for handlebar cap screw	1
Z.1	Air motor complete	1
Z.2	Rear fixing set screw	1
Z.4	M + F elbow	1
Z.5	Handlebar	1
Z.8	Joint	1
Z.9	Screwed plug	1

AIR MOTOR PARTS (*see Fig.* 6)

Part No.	*Description*	*No. req.*
C.12058	Lock washer	8
C.35089	Throttle nut	1
C.35092	Spring washer	1
Z.10	Joint	1
Z.11	Oil check assembly (comprising parts Z.7, Z.12 and A.42M)	1
Z.13	Oil cap retainer assembly (comprising parts A.57, Z.47, Z.14 and A.38M)	1
Z.15	Gearbox housing	1
Z.16	Abutment fixing screw	1
Z.17	Ball bearing	3
Z.18a	Git Seal	1
Z.19	Gearbox cover fixing screw	1
Z.20	Drive housing fixing studs	12
Z.21	Gearbox housing cover	6
Z.22	Ball bearing	1
Z.23	Cover nameplate fixing screws	1
Z.24	Drive housing	3
Z.25	Grease nipple	1
Z.26	Pipe adaptor (with A.90 and A.91)	1
Z.27	Circlip (internal)	1
Z.28	"O"-ring	1
Z.29	Cover nameplate	1
Z.30	Gear shaft	1
Z.31	Key for sprocket	1
Z.32	Key for gear	1
Z.33	Bevel gear } supplied together	1
Z.34	Pinion }	1
Z.35	Sealing washer	1
Z.36	Oil pipe	1
Z.37	Air pipe	1
Z.38	Joint between shutoff cock and elbow	1
Z.40	Guard for air and oil pipe	1
Z.41	Guard fixing screw	1
Z.46	Gearbox and drive housing gasket	1
Z.48	Gearbox cover gasket	1
Z.49	Cover nameplate gasket	1
C.35102	Governor pin	1
C.35103	Governor body	1
C.35104	Throttle lever pin	1
C.35104	Governor weight pin	2
C.35106	Rotor	1

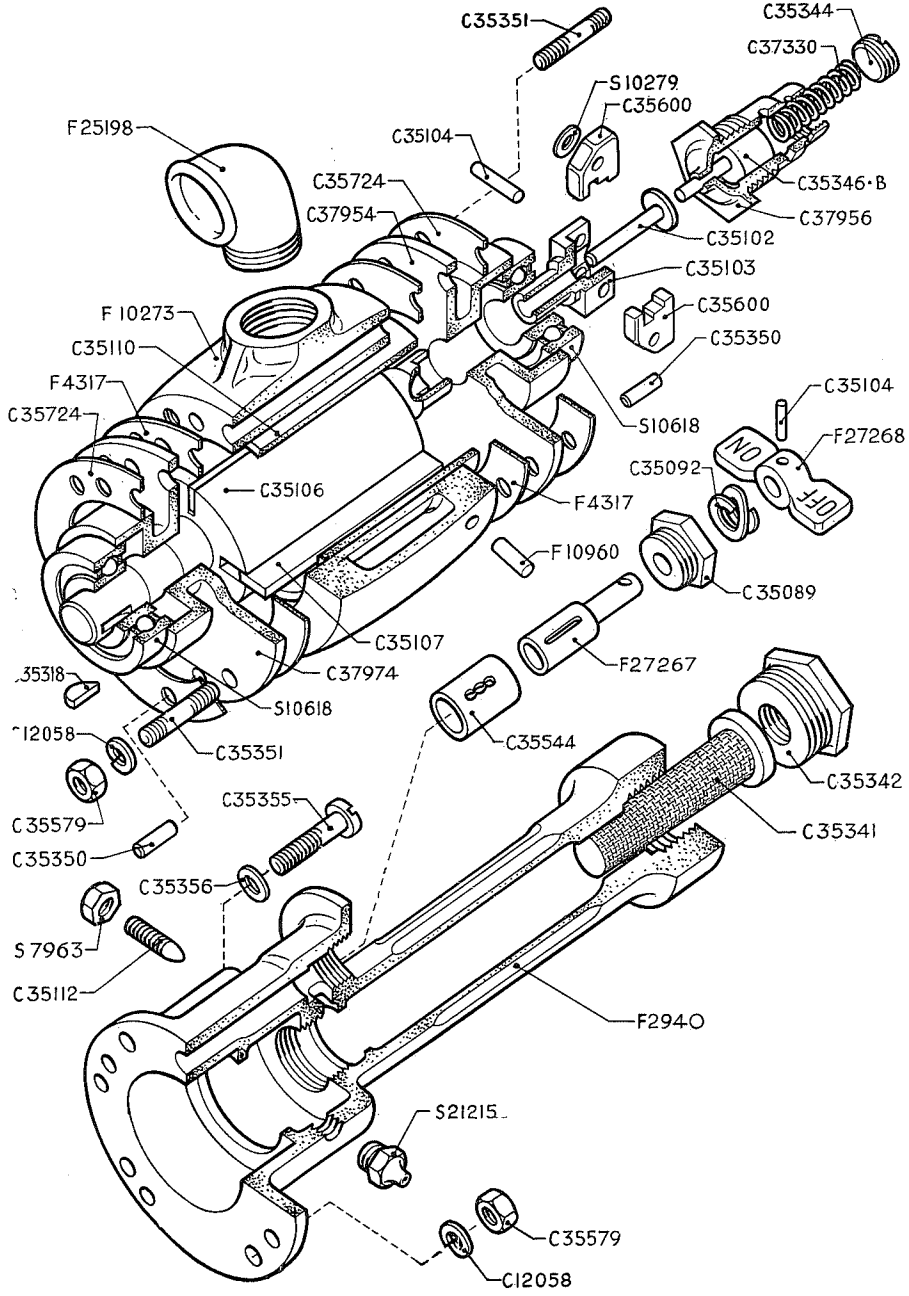
C35351
C35344
C37330
S10279
C35600
F25198
C35104
C35724
C37954
C35346-B
C37956
C35102
C35103
C35600
C35350
F10273
C35110
F4317
C35724
S10618
C35104
F27268
NO
OFF
C35092
C35106
F4317
F10960
C35089
C35107
F27267
C37974
S10618
C35544
C35351
C35342
C35355
C35579
C35341
C35350
C35356
S7963
C35112
F2940
S21215
C35579
C12058

FIG. 6

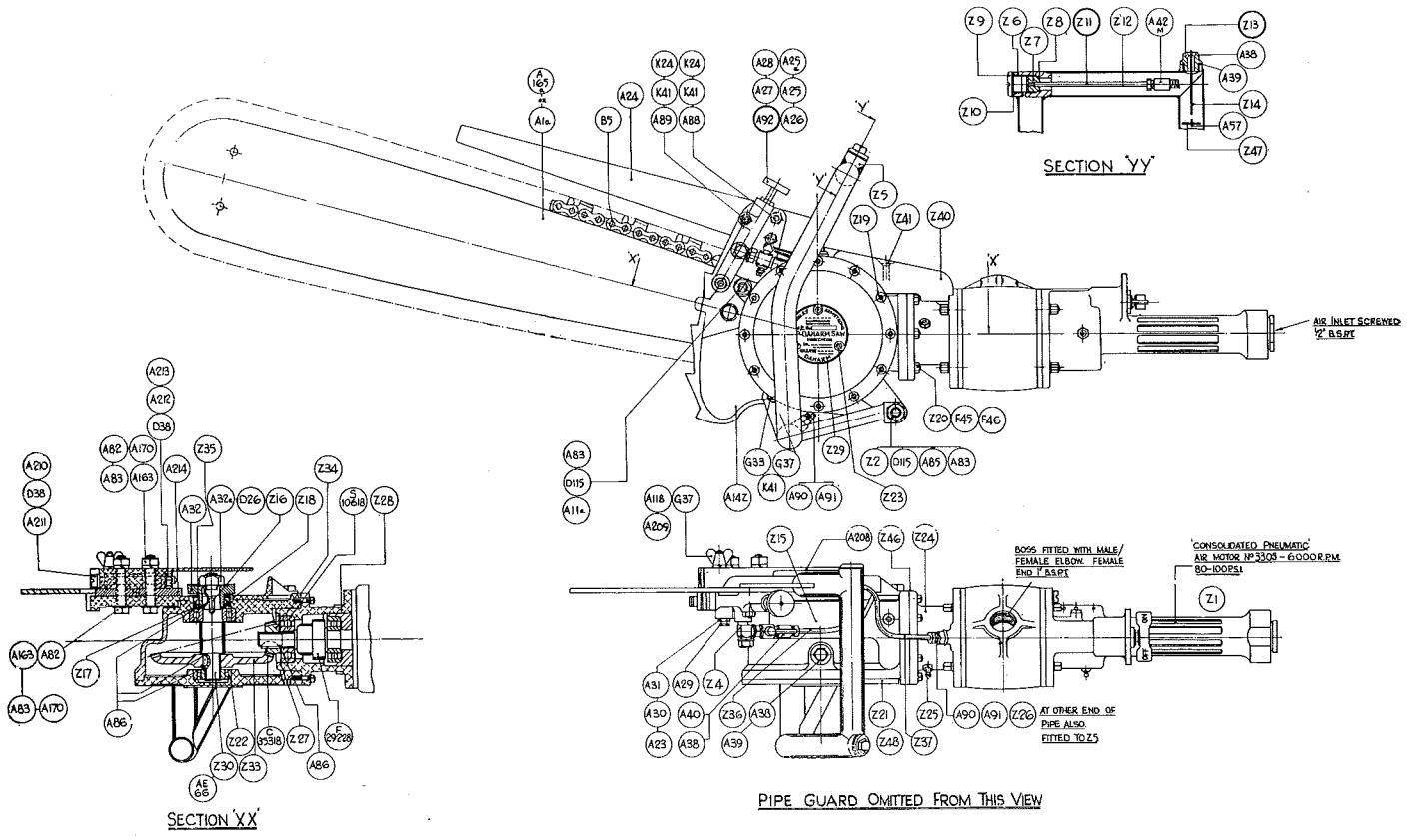
SECTION 'YY'
AIR INLET SCREWED 2" B.S.P.T.
SECTION 'XX'
BOSS FITTED WITH MALE/ FEMALE ELBOW. FEMALE END 1" B.S.P.T.
'CONSOLIDATED PNEUMATIC' AIR MOTOR N°3303 – 6000 R.P.M. 80–100 P.S.I.
AT OTHER END OF PIPE ALSO FITTED TO Z5
PIPE GUARD OMITTED FROM THIS VIEW

FIG. 7

Air Motor Parts—*continued*

Part No.	*Description*	*No. req.*
C.35107	Rotor blade	4
C.35110	Cylinder liner	1
C.35112	Needle valve	1
C.35164	Spindle coupling	1
C.35318	Spindle key	1
C.35318	Coupling key	1
C.35341	Air strainer	1
C.35342	Air strainer gland	1
C.35344	Governor valve cage cap	1
C.35346B	Governor valve	1
C.35350	Housing dowel pin	8
C.35351	Housing stud	8
C.35355	Oil filling screw	1
C.35356	Oil filling screw gasket	1
C.35544	Throttle bushing	1
C.35579	Hex nut	8
C.35600	Governor weight	2
C.35724	Rotor housing head gasket	2
C.37330	Governor valve spring	1
C.37349	Governor body complete	1
C.37954	Rotor housing head	1
C.37956	Governor cage	1
C.37958	Governor cage assembly	1
C.37974	Rotor housing head	1
F.2697	Nipple	1
F.2940	Straight handle	1
F.4317	Gasket	2
F.10273	Rotor housing	1
F.10274	Rotor housing complete	1
F.10960	Cylinder liner dowel	1
F.25198	Street elbow	1
F.27267	Throttle valve	1
F.27268	Throttle lever	1
F.27269	Straight handle assembly complete	1
F.27495	Nameplate	1
F.29228	Spindle	1
S.7653	Nameplate screw	4
S.7963	Needle valve nut	1
S.10279	Spacer	8
S.10618	Rotor ball bearing	2
S.10618	Spindle ball bearing	1
S.21215	Zerk fitting	1

The Danarm Standard "Three Link Chain"

This chain is an alternative type and is suitable for General Ripping and Cross Cutting purposes and is available in 16″ and 23″ lengths.

Sharpening the Chain Links

The saw chain teeth have alternate right and left hand sets, and sharpening should be carried out as soon as the cutting edge shows signs of becoming dull. It is recommended to sharpen "little and often".

A special file can be supplied for sharpening.

A grinding machine is available for sharpening the teeth, driven by a built-in electric motor.

The teeth in the chain are disposed in sets of cutters, bent rakers and straight rakers, all of equal height and in the sequence illustrated (Fig. 9). When new links are fitted they should be adjusted to correspond in height with the other links in the chain otherwise irregular cutting will result.

It is only necessary to grind or file the front of the teeth. The top of the cutting teeth should on no account be filed unless serious damage has been caused by nails or other foreign bodies in the timber.

After sharpening, clean off all emery dust or filings and re-oil the chain. A bench mounted clamp can be supplied for workshop use.

1. Don't sharpen the tops of the chain, otherwise the height and set of the chain will be reduced.
2. Don't file a dent in front of gullet.
3. Don't make a big radius gullet. Gullet should be of small radius.
4. Don't sharpen cutters or rakers only. When you sharpen, sharpen all the teeth **in front only.**
5. Don't apply too much hook ; 85° is the correct angle for all teeth.
6. Don't keep the left or right teeth higher than the others, or apply a sharper angle on the one or other side. Inequalities of the right or left will result in oblique cutting of chains.
7. Don't work with the chain either too tight or too slack.
8. Don't go on working with a blunt chain. If edges show slight signs of bluntness, stop work and touch up with file immediately see figure 8).

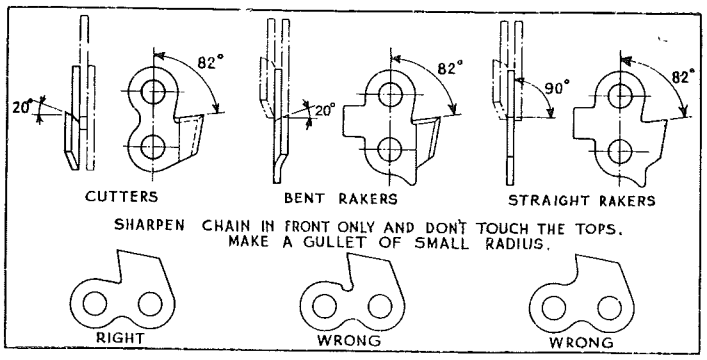

FIG. 8

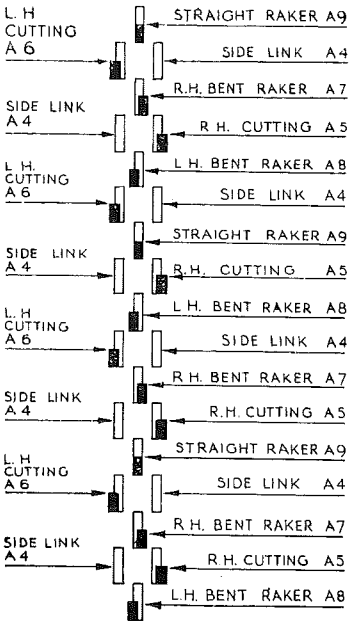

FIG. 9

FIG. 10

1. (right) **Splitting the links apart, using the chisel.**

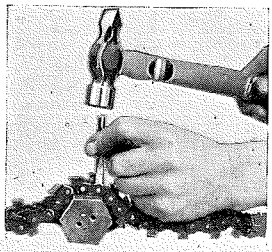

2. (below) **Knocking out rivet using punch and Anvil Block (large holes at top)**

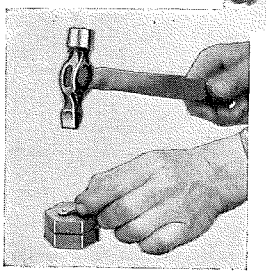

3. (left) **Fitting new rivet, using Ball - Pein Hammer and Anvil Block (small holes at top).**

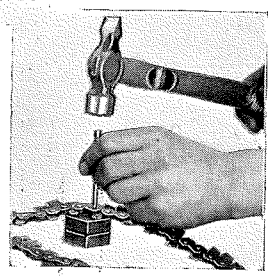

Replacing Chain Links

Chain link rivets should be examined each time the chain is removed, and if necessary re-riveted, using the hammer provided. To remove rivets from the chain first file off the heads on both sides. Place the chain in the groove on the anvil block and split the links apart, using the chisel. Rivets can then be knocked out of links, using the flat base of the anvil block with the large holes at the top. To fit new rivets, insert two rivets in the small holes on the anvil base, place one link over the rivet ends, and rivet tightly together with the hammer. Join up chain, place side-plate on rivet ends, and form heads on the rivets with the hammer. (See Fig. 10.)

Arthurs, Woodchester