980M/982M

Wheel Loaders



	980M	982M
Engine Model	Cat® C13 ACERT™	Cat C13 ACERT
Maximum Gross Power – SAE J1995	317 kW (425 hp)	325 kW (436 hp)
Maximum Net Power – SAE J1349	288 kW (386 hp)	297 kW (398 hp)
Bucket Capacities	4.2-12.2 m^3 (5.25-16.0 yd^3)	4.6-12.0 m^3 (6.0-15.75 yd^3)
Operating Weight	30 090 kg (66,337 lb)*	35 563 kg (78,402 lb)**

*For 5.4 m^3 (7.1 yd^3) general purpose buckets with BOCE.
**For 6.1 m^3 (8.0 yd^3) general purpose buckets with BOCE.

RELIABLE, PRODUCTIVE AND FUEL EFFICIENT

- *10% more fuel efficient than the industry leading K Series**
- *Up to 25% more fuel efficient than H Series**
- ***Performance Series buckets** are easy to load and improve material retention*
- ***Work tools and couple ready (option)** provide a wide range of work tools and allow the same work tool on different sizes of wheel loaders*
- ***Cat engine with ACERT Technology** which meets U.S. EPA Tier 4 Final emission standards and includes Cat Clean Emissions Module for continuous and efficient operation*
- ***Advanced powershift transmission** with a standard lock up clutch torque converter and lock-to-lock shifting delivers smooth shifts, fast acceleration and speed on grade*
- ***Next generation axles** with optional limited slip differentials to provide optimal traction in varying underfoot conditions for improved productivity*
- ***Next generation load-sensing hydraulic system** to provide optimal control of machine functions*

EASE OF OPERATION

- ***Best-in-class operator environment** for unmatched operator comfort and efficiency*
- ***Advanced technology with Cat Connect** to monitor, manage and enhance job site operations*

SERVICE ACCESS

- *One-piece hood, centralized service centers, windshield cleaning platform and harness tie-off to provide the best in class service access*



Contents

Reliable 4
Durable 5
Productive 6
Fuel Efficient 7
Easy to Operate 8
Versatile 10
Integrated Technologies 12
Owning Costs 14
Operating Costs 15
Serviceable 16
Sustainable 17
Customer Support 17
Specifications 18
Standard Equipment 34
Optional Equipment 35

**Fuel efficiency is measured in mass of material moved per volume of fuel burned. Average efficiency improvement as tested and analyzed for an average composite cycle and standard configuration with variations per comparable model with and without Economy Mode active. Factors influence result variation such as, but not limited to, machine configuration, operator technique, machine application, climate, etc.*



The new 980M and 982M Wheel Loaders have a Tier 4 Final engine equipped with a combination of proven electronic, fuel, air and aftertreatment components. Applying proven technologies systematically and strategically lets us meet our customers' high expectations for productivity and fuel efficiency. Deep system integration results in reduced emissions, improved performance and improved fuel economy without interrupting machine performance making it seamless to operators. The reliability, durability, and versatility of both the 980M and 982M result in machines that are better built to meet your needs.

The new all-purpose 982M machine is a great 2-pass match for larger on-highway trucks, bank excavation and even face loading in well shot rock loading applications. The 982M has longer standard lift arms than the 980M making it a great rail car loader due to the higher hinge pin height. With a full range of bucket sizes and types, the 982M provides customers an exciting new option in this size class.

Reliable

Proven Components and Technology You Can Count On.



Every Tier 4 Final engine is equipped with a combination of proven electronic, fuel, air and aftertreatment components.

More Powerful, Reliable Engine Electronics

The electronics used in Cat Tier 4 Final engines are more powerful and robust than ever. Increased features and connection commonality improve the customer experience and increase quality and reliability. Over-foam wiring harness adds to reliability even in the most demanding applications.

Hydraulics

The 980M and 982M hydraulic systems have significant design changes and customer value improvements. The main hydraulic valve is now a mono-block with an integrated ride control section. The mono-block design reduces weight, has forty percent fewer leak points and is common across all M Series models. The auxiliary third function can be easily added at the factory or in the field with the addition of a second remote valve.

Equipment Monitoring

Cat Connect technologies and Cat dealer services take the guesswork out of equipment management. Product Link™ and the online VisionLink® application enable you to monitor real-time machine data and manage machines health. Your Cat dealer offers expert advice and S·O·S℠ Services to maintain equipment reliability and efficiency.

Cold Start Package

The new optional cold start package provides dependable starts in extreme cold weather and high altitudes.



Durable

Better Designed to Meet Your Needs.

Frames

The robotically welded two-piece structural frame design provides strong and rigid structures that absorb all the forces associated to penetration, loading and twisting.

The M Series articulating hitch system, joining the front and rear frames, provides increased bearing force capacity.

Axles

The M Series axles are designed to handle extreme applications resulting in reliable performance and durable life. The rear axle can oscillate to ±13 degrees helping to ensure all four wheels stay on the ground providing stability even in the roughest terrain, for excellent stability and traction.

Productive
Work Smart and Move More.



The right technologies fine-tuned for the right applications result in:

- **Improved Fluid Efficiency** – Up to 5% improvement over Tier 4 Interim products (including Diesel Exhaust Fluid consumption).
- **High Performance** across a variety of applications.
- **Enhanced Reliability** through commonality and simplicity of design.
- **Maximized Uptime and Reduced Cost** with world-class support from the Cat dealer network.
- **Minimized Impact of Emission Systems** – Designed to be transparent to the operator without requiring interaction.
- **Durable Designs** with long life to overhaul.
- **Delivering Better Fuel Economy** with minimized maintenance costs while providing the same great power and response.

Hydraulics

The new ride control system now has two accumulators enabling it to be more effective over a greater payload range, increasing productivity and operator efficiency due to a better ride.

The implement pump continuously and automatically balance hydraulic loads with the machine performance desired by the operator.

Transmission

The 980M and 982M power trains have been improved with the addition of a lock-up clutch torque converter standard. These new torque converters have been matched with the engine power and hydraulics to improve performance and fuel efficiency. These rugged planetary transmissions also have a new split-flow oil system which use new multi-viscosity oil to improve fuel economy.

Axles

In addition to aggregates, sand and gravel and batch plants, these models are commonly used in heavy construction applications where poor underfoot conditions make traction difficult slowing production and challenging job deadlines. The optional limited slip differentials will improve tractive ability in these applications thereby increasing productivity.

The axles have new external caliper disc parking brakes mounted to the input shaft of the front axles. Since they are external, they do not have the inefficiencies of enclosed wet parking brakes due to brake discs running in oil nor is there any oil to change reducing fuel and maintenance costs. External caliper parking brakes are easily accessible for inspection and service.

Fuel Efficient

Engineered to Lower Your Operating Costs.



Engine and Emissions

The Cat C13 ACERT engine is designed for maximum fuel efficiency and increased power density, while meeting Tier 4 Final emission standards. This engine features innovative Cat electronics, fuel injection process, air-management systems, aftertreatment solution with Cat Selective Catalytic Reduction, and a fuel efficient regeneration system. For Tier 4 Final equivalent emissions solutions, the Cat Regeneration System automatically removes soot from the Diesel Particulate Filter without interrupting your machine's work cycle.

Efficient Systems and Components

Innovative systems intelligently lower the average working engine speeds and reduce the overall system heat loads which result in significantly improved performance and fuel efficiency.

Advanced Systems with Innovative Integration

The deep system integration of the new engine and emissions system, power train, hydraulic system and cooling system result in 10% lower fuel consumption on average compared to the 980K.

Economy Mode

The productive economy mode automatically controls the engine torque and speed based on the machine's power train load and places engine speed and torque in the most efficient operating range. The result is improved fuel efficiency while delivering optimal performance.

Next Generation Fuel Systems

Cat injection timing precisely controls the fuel injection process through a series of carefully timed microbursts, providing more control of combustion for the cleanest, most efficient fuel burn. On the 980M and 982M, the Mechanically Electronic Unit Injector (MEUI) fuel systems boost performance and reduce soot for the C13 ACERT engine.

Cat NO_X Reduction System

The Cat NO_X Reduction System (NRS) captures and cools a small quantity of exhaust gas, then routes it back into the combustion chamber where it drives down combustion temperatures and reduces NO_X emissions.

Aftertreatment Technologies

To meet the additional 80% reduction in NO_X emissions required by Tier 4 Final emission standards, one new system, the Selective Catalytic Reduction (SCR), has been added to the already proven Cat Tier 4 Interim aftertreatment solution.

Easy to Operate
Safe. Comfortable. Efficient.





Ensuring operators are safe, confident in the control of their machines, have a clean, comfortable and quiet operating environment with controls that are intuitive and low effort all contribute to lower operator fatigue and better performance.

Cab Access

A switch has been added to the electronic service center which unlatches the door remotely (optional). The gas strut then swings the door open all while the operator is safely on the ground. The angle of the steps up to the cab has been increased to an optimal fifteen degrees enabling operators to walk up like stairs versus climbing more vertically like a ladder. Grab handles have been repositioned so a secure three points of contact can be maintained at all times.

Visibility

Once in the cab, the new door securely seals against the new roll formed ROPS posts and the lower glass panel has been extended several inches to improve visibility to the left side of the machine. New larger convex mirrors improve visibility to the rear and integrated spot mirrors provide visibility close to both sides of the machine.

Central Display

The central display panel has a large text box, five analog gauges, and LED warning indicators. The large text box provides in-language information about machine operation, feature activation and system troubleshooting and calibration. With the five large analog gauges the operator can easily identify if key systems are within normal operating range.



Touch Screen Display

A new multipurpose color touch screen display dramatically simplifies the operator interface; with machine controls, rear vision camera and new fully integrated Cat Production Measurement system. Intuitive navigation with in-language text enables operators to modify certain machine operating parameters and monitor machine conditions literally at the touch of their fingers.

Control Panel

Sealed against moisture and dirt, the centralized switch panel with LEDs provides reliability and ready access to frequently required functions, even while wearing gloves. The ISO symbols located on each membrane switch are molded all the way through to ensure the image will not wear off over time.

The M Series maintains the “help” feature which explains the function of each membrane switch.

Focussing on operator efficiency, the control panel has been streamlined to include easy to reach highly utilized machine controls. The touch screen display enables the relocation of some expanded functions while eliminating the need for a second switch panel for further simplicity and easy machine operation.





Electro-Hydraulic (EH) Joystick Steering with Force Feedback (Speed Sensitive)

Your operators will enjoy and quickly adopt the industry leading seat mounted EH joystick steering system, which provides precision control and dramatically decreases operator arm fatigue. For operators who prefer a steering wheel, an electro-hydraulic steering wheel is available as an option.



Implement Controls (EH)

Seat mounted single axis implement control levers provide your operator with precise control of the work tool, all while moving with the seat for maximum comfort. In-cab programmable kick-outs and automatic cylinder snubbing are easy to set on-the-go for tilt, lower and lift, ideal for repeatable cycles.

Ride Control

The next generation ride control works as a shock absorber, improving ride quality and smoothness over rough terrain, increasing your operator confidence, comfort and efficiency, ensuring excellent material retention.

Versatile

Linkage and Guard Options to Meet Your Various Applications Needs.



Z-bar Linkage

The proven Z-bar linkage delivers great digging efficiency, excellent performance and versatility.

The results are excellent visibility to the work tool, excellent penetration into the pile, high breakout forces, superior production capabilities.

High Lift Linkage

The optional high lift linkage on 980M offers increased hinge pin height to load more easily in a variety of applications with any type of bucket or fork.

Aggregate Handler

Aggregate packages are specialized offerings for specific loose aggregate rehandling applications, such as truck loading, hopper charging, stockpiling, and load and carry. Rehandling loose aggregate is less stressful to the machine, therefore payloads can be increased above other applications by installing larger buckets, counterweights and a scale system such as the Cat Production Measurement system.

To do so, the Cat aggregate packages require some prerequisites in terms of correct application, machine configuration and conformance to Caterpillar payload policy. Misapplication of Aggregate Handlers may result in significant reliability and durability risk.*

Industrial and Waste Handler

The Industrial and Waste Handler, for the 980M, offers integrated guards to preserve your machine from the harsh environment of a scrap or waste handling application. The machine guarding is purpose built to protect your machine's major components and systems to ensure durability and reliability.

**Please consult your Cat dealer to ensure proper machine configuration selection in conformance to Caterpillar payload policy.*

Versatile

Do More Jobs with One Machine, Work Tool Options to Meet Your Needs.



An extensive range of work tools and bucket styles are available to customize these machines for your operation. Work tools are available either with pin on or quick coupler interface.

Performance Series Buckets

- **Load Easy, Fuel Efficient, Carry More** – Performance Series Buckets utilize a system-based approach to balance bucket shape with the machine's linkage, weight, lift and tilt capacities. Operators benefit from reduced dig times and better material retention; ultimately translating into significant productivity and fuel efficiency improvements.
- **Lower Operating Costs** – Performance Series Buckets feature a longer floor that easily digs through the pile and provides excellent visibility for the operators to see when the bucket is full. Less time digging in the pile results in lower fuel consumption and improved tire life. A unique spill guard protects the cab and linkage components from material overflow.
- **Higher Productivity** – Performance Series Buckets achieve higher fill factors – ranging from 100% to 115% depending on the machine application and material type. The optimized design results in unsurpassed production capabilities.
- **Bucket Types** – Performance Series Buckets are available for General Purpose, Material Handling, Rock, Heavy Duty Rock and Coal style buckets.

Heavy Duty Quarry Rock Buckets are designed for bank or face loading material where high impact/high abrasion is encountered. Buckets include thicker base edge, liner package and addition wear plates.

Slag Buckets are designed for use in steel mills and slag processing centers. They feature increased material thickness in critical structural components to provide maximum durability for hot or cold slag handling.

Waste Handling Buckets are designed to move large volumes of low-density waste in transfer stations, landfills and recycling yards. Large capacities give maximum production when loading conveyors, trucks or hoppers.

Woodchip Buckets are optimized for moving large volumes of wood chips in forestry and millyard settings. They feature a flat floor and straight edge designed to scoop the bucket full and help heap the load high.

Quick Couplers and Work Tool Attachments

A Wheel Loader equipped with a quick coupler is a much more versatile machine. Buckets and work tools can be changed without leaving the cab – allowing the machine to quickly move from task to task.

Pallet Forks are available for material handling.

Millyard and Logging Forks are available for forestry applications.

Specialty Work Tool Attachments such as plows for snow removal are available for the 980M and 982M. Contact your local Cat dealer for more details on tools available for your application.



Integrated Technologies

Monitor, Manage, and Enhance Job Site Operations.

Cat Connect makes smart use of technology and services to improve your job site efficiency. Using the data from technology-equipped machines, you'll get more information and insight into your equipment and operations than ever before.

Cat Connect technologies offer improvements in these key areas:

EQUIPMENT MANAGEMENT

Equipment Management – increase uptime and reduce operating costs.

PRODUCTIVITY

Productivity – monitor production and manage job site efficiency.

SAFETY

Safety – enhance job site awareness to keep your people and equipment safe.

Featured Cat Connect technologies include:

Cat Connect LINK Technologies

LINK technologies wirelessly connect you to your equipment giving you access to essential information you need to know to run your business. Link data can give you valuable insight into how your machine or fleet is performing so you can make timely, fact-based decisions that can boost job site efficiency and productivity.

Product Link/VisionLink

Product Link is deeply integrated into your machine to take the guesswork out of equipment management. Easy access to timely information like machine location, hours, fuel usage, idle time and event codes via the online VisionLink user interface can help you effectively manage your fleet and lower operating cost.









PAYLOAD Technologies

PAYLOAD technologies provide accurate weighing of materials being loaded and hauled. Payload data is displayed for loader operators in real-time to improve productivity, reduce overloading, and recorded to track material movement by shift.

- **Cat Production Measurement** – Cat Production Measurement brings payload weighing to the cab, enabling operators to weigh loads "on-the-go" during loading operations. Loads are weighed as the bucket is raised during the lift cycle – eliminating the need to interrupt the load cycle, improving loading efficiency. Operators can view load weights on the integrated multi-function display and know precisely how much material is in the bucket and when trucks are filled to target payload – before leaving the loading zone. Instant feedback gives operators the confidence to work more effectively, maximizing the potential of the entire fleet. An optional in-cab printer provides the driver a printed receipt of truck payloads. Operators can track recorded weights and cycles using the display. Site managers can wirelessly access data via the VisionLink web portal to measure production and monitor efficiency.

DETECT Technologies

DETECT technologies enhance operator awareness of the environment around working equipment and provide alerts to help keep people and assets safe.

- **Rear Vision Camera** – The standard rear vision camera enhances visibility behind the machine, helping the operator work confidently, at peak potential. A rear view and payload data is displayed on the multi-function monitor during reverse travel. An optional second display can be added to provide a dedicated rear view of the job site.

Owning Costs
Proven Best Investment.



Customer Support Agreements
A Customer Support Agreement (CSA) is an arrangement between you and your Cat dealer that helps you lower your total cost per ton. CSAs are flexible, allowing them to be tailored to your business needs. They can range from simple Preventive Maintenance Kits to elaborate Total Cost Performance Guarantees. Having a CSA with your Cat dealer enables more time for you to do what you do best – run your business.

Monitoring Systems
Monitoring product health is key to optimizing the life of an investment into a Cat Wheel Loader.

- **Cat Product Link** – Cat Product Link allows remote monitoring of equipment to improve overall fleet management effectiveness. Product Link is deeply integrated into machine systems. Events and diagnostic codes, as well as hours, fuel, idle time and other detailed information are transmitted to a secure web based application, VisionLink. VisionLink includes powerful tools to convey information to users and dealers, including mapping, working and idle time, fuel level and more.
- **S·O·S Services** – Helps manage component life and decrease machine downtime, increasing productivity and efficiency. Regular fluid sampling can help track what is going on inside your machine. Wear related problems are predictable and easily repairable. Maintenance can be done to accommodate your schedule, resulting in increased uptime and flexibility in maintenance repairs before failure.

Parts Availability
Caterpillar provides an unsurpassed level of personalized service to help you work more cost effectively and efficiently. By utilizing a worldwide parts network Cat dealers help minimize machine downtime and save money by delivering replacement parts within 24 hours.

Resale Value
Owning quality equipment is an important factor in maintaining resale value. Caterpillar is not only known for machines that are better built, but provides product and dealer support to maintain the reliability and durability of your machine.



Operating Costs

Save Time and Money by Working Smart.

Machine configuration, operator technique, and job site layout can impact fuel consumption by as much as 30 percent. Data from customer machines show Cat wheel loaders are the most fuel efficient machines in the industry. Several features contribute to this excellent fuel efficiency:

- **New M Series Tier 4 Final Engine, Hydraulics, Transmission and Ride Control** – Deep system integration results in reduced emissions, more productivity, lower fuel consumption, without interrupting machine performance – making it seamless to you and your operators. Machine requires Ultra Low Sulfur Diesel ULSD and DEF.
- **Optional Limited Slip Differentials** – Increase traction, reduce tire scuffing compared to other traction aids, further reducing your operating costs.
- **New External Caliper Disc Parking Brakes** – Easily accessible for maintenance.
- **Lock-up-Clutch Torque Converter and Shift Strategy** – Reduced torque interruption increases driveline efficiency, conserving fuel. Auto 1-4 transmission mode keeps engine rpm low, reducing fuel consumption while delivering optimal machine performance.
- **Machine Configuration** – Select the correct linkage, guarding, work tool and tire type based on machine application. Radial tires are preferred; ensure proper inflation pressures. Heavier tires burn more fuel.
- **Performance Series Buckets** – Deliver faster fill times and better material retention, ultimately reducing cycle times while improving productivity and fuel efficiency.

Enabling Application Efficiency

- **Loading Bucket** – Load in first gear and keep engine rpm low. Raise and tilt bucket smoother, with Caterpillar's multi-function capability, and do not use a "pumping" motion. Avoid lift lever detent and use of transmission neutralizer. Use programmable kick-outs and automatic cylinder snubbing during repeated cycles.
- **Loading Truck or Hopper** – Do not raise the work tool any higher than necessary. Keep engine rpm low and unload in controlled manner.
- **Idle** – Set the parking brake to engage Engine Idle Management System to conserve fuel.
- **Job Site Layout** – Spot loading targets in the right position. Avoid traveling more than twice the machine length during short cycle loading. Reduce transport distance for load and carry cycles by optimizing job site layout.

Serviceable

Easy to Maintain. Easy to Service.



Engine Access

The Cat sloped "one-piece" tilting hood provides industry leading access to the engine. Its design has further been improved on all M Series wheel loaders to provide the best-in-class service access to engine, oil levels and coolant sight gauge.

Cooling System

The cooling system (1) is readily accessible for clean out and maintenance. With nine cooling fins per 25.4 mm (1.0 in) and a perforated grill, most airborne debris entering the system passes through the cooler cores. The hydraulic and A/C cooler cores swing out providing easy access to both sides for cleaning. An access panel on the left side of the cooling package swings down to provide access to the back side of the engine coolant and Air-to-Air After Cooler (ATAAC). An optional variable pitch fan can automatically purge the cooler cores by periodically reversing the airflow when needed.

Service Centers

The electrical and hydraulic service centers provide grouped ground level access to numerous features, enhancing safety and convenience for your operators and service technicians, while reducing service time.

The hydraulic service centers (2) are now virtually identical for the M Series product line. This new consistent layout makes it easier for service technicians who work on a variety of M Series models.

The electrical service center (3), located beneath the left platform, contains the maintenance free batteries, a fuse relay panel, main disconnect switch, ground level engine shutdown switch, hood tilt switch, and the jump start receptacle.

Hydraulic system components on the 980M and 982M are protected by full flow and kidney-loop filtration. A filter in the hydraulic tank return line filters all of the oil returning to the tank. There is also a case drain screen for additional protection and finally, a separate kidney-loop filter with a finer micron rating continuously filters smaller particles out of the system. This multilevel design ensures the hydraulic oil is clean and thoroughly protects the rest of the hydraulic system from contamination. A new thermal bypass valve has been added to improve hydraulic system warm-up.

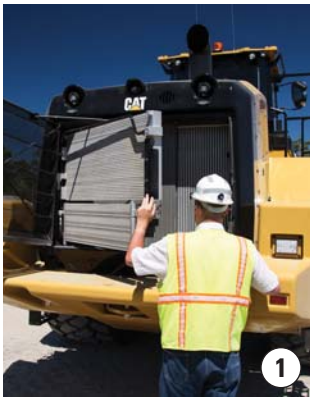





Sustainable
Conserving Resources.

The 980M and 982M are designed to compliment your business plan, reduce emissions and minimize the consumption of natural resources.

- Improved fuel efficiency – less fuel consumed results in lower emissions.
- Improved operator efficiency through enhanced visibility and reduced noise levels.
- Link technologies enable you to collect and analyze equipment and job site data so you can maximize productivity and reduce costs.
- Major components are rebuildable, eliminating waste and saving money by giving the machine and/or major components a second life – and even a third life.



Customer Support
Unmatched Support Makes the Difference.



Renowned Cat Dealer Support

- Your Cat dealer is ready to help you every step of the way. From new or used machine sales, to rental or rebuild options, your Cat dealer can provide an optimal solution to your business needs.
- Unsurpassed worldwide parts availability, trained technicians and customer support agreements maximize your machine uptime.
- Financing options are offered to meet a variety of customer needs.

980M/982M Wheel Loaders Specifications

Engine – 980M

Engine Model	Cat C13 ACERT	
Maximum Gross Power (1,700 rpm)		
SAE J1995	317 kW	425 hp
Maximum Net Power (1,700 rpm)		
SAE J1349	288 kW	386 hp
Peak Gross Torque (1,200 rpm)		
SAE J1995	2206 N·m	1,627 lbf-ft
Maximum Net Torque (1,100 rpm)		
SAE J1349	2054 N·m	1,515 lbf-ft
Bore	130 mm	5.12 in
Stroke	157 mm	6.18 in
Displacement	12.5 L	763 in^3

- Cat engine with ACERT Technology – meets Tier 4 Final emission standards.
- The power ratings apply at the stated speed when tested under the reference conditions for the specified standards.
- The net power advertised is the power available at the flywheel when the engine is equipped with fan, alternator, air cleaner and aftertreatment.
- The gross power advertised is with the fan at maximum speed.

Buckets – 980M

Bucket Capacities	4.2-12.2 m^3	5.25-16.0 yd^3

Weight – 980M

Operating Weight	30 090 kg	66,337 lb

- Weight based on a machine configuration with Michelin 29.5R25 XLDD1 L4 radial tires, full fluids, operator, standard counterweight, cold start, roading fenders, Product Link, open differential axles (front/rear), secondary steering, sound suppression, and a 5.4 m^3 (7.1 yd^3) general purpose bucket with BOCE.

Operating Specifications – 980M

Static Tipping Load – Full 40° Turn		
With Tire Deflection	19 565 kg	43,133 lb
No Tire Deflection	20 796 kg	45,847 lb
Breakout Force	224 kN	50,357 lbf

- Full compliance to ISO (2007) 143971 Sections 1 thru 6, which requires 2% verification between calculations and testing.

Engine – 982M

Engine Model	Cat C13 ACERT	
Maximum Gross Power (1,700 rpm)		
SAE J1995	325 kW	436 hp
Maximum Net Power (1,700 rpm)		
SAE J1349	297 kW	398 hp
Peak Gross Torque (1,200 rpm)		
SAE J1995	2206 N·m	1,627 lbf-ft
Maximum Net Torque (1,100 rpm)		
SAE J1349	2058 N·m	1,518 lbf-ft
Bore	130 mm	5.12 in
Stroke	157 mm	6.18 in
Displacement	12.5 L	763 in^3

- Cat engine with ACERT Technology – meets Tier 4 Final emission standards.
- The power ratings apply at the stated speed when tested under the reference conditions for the specified standards.
- The net power advertised is the power available at the flywheel when the engine is equipped with fan, alternator, air cleaner and aftertreatment.
- The gross power advertised is with the fan at maximum speed.

Buckets – 982M

Bucket Capacities	4.6-12.0 m^3	6.0-15.75 yd^3

Weight – 982M

Operating Weight	35 563 kg	78,402 lb

- Weight based on a machine configuration with Bridgestone 875/65R29 VLTS L4 radial tires, full fluids, operator, standard counterweight, cold start, roading fenders, Product Link, open differential axles (front/rear), secondary steering, sound suppression, and a 6.1 m^3 (8.0 yd^3) general purpose bucket with BOCE.

Operating Specifications – 982M

Static Tipping Load – Full 40° Turn		
With Tire Deflection	21 080 kg	46,473 lb
No Tire Deflection	22 393 kg	49,368 lb
Breakout Force	260 kN	58,450 lbf

- Full compliance to ISO (2007) 143971 Sections 1 thru 6, which requires 2% verification between calculations and testing.

Transmission – 980M

Forward 1	6.9 km/h	4.3 mph
Forward 2	13.3 km/h	8.3 mph
Forward 3	23.5 km/h	14.6 mph
Forward 4	40.0 km/h	24.9 mph
Reverse 1	7.8 km/h	4.8 mph
Reverse 2	15.2 km/h	9.4 mph
Reverse 3	26.9 km/h	16.7 mph
Reverse 4	40.0 km/h	24.9 mph

• Maximum travel speed in standard vehicle with empty bucket and standard L4 tires with 933 mm (37 in) roll radius.

Hydraulic System – 980M

Implement Pump Type	Variable Displacement Piston	
Implement System		
Maximum Pump Output (2,250 rpm)	449 L/min	119 gal/min
Maximum Operating Pressure	34 300 kPa	4,975 psi
Optional 3rd Function Maximum Flow	240 L/min	63 gal/min
Optional 3rd Function Maximum Pressure	21 780 kPa	3,159 psi
Hydraulic Cycle Time with Rated Payload:		
Raise from Carry Position	5.3 Seconds	
Dump, at Maximum Raise	1.7 Seconds	
Lower, Empty, Float Down	3.1 Seconds	
Total	10.1 Seconds	

Brakes – 980M

Brakes	Brakes meet ISO 3450:2011 standards

Axles – 980M

Front	Fixed	
Rear	Oscillating ±13 degrees	
Maximum Single-Wheel Rise and Fall	549 mm	1'10"

Transmission – 982M

Forward 1	6.2 km/h	3.9 mph
Forward 2	11.9 km/h	7.4 mph
Forward 3	21.1 km/h	13.1 mph
Forward 4	37.5 km/h	23.3 mph
Reverse 1	7.0 km/h	4.3 mph
Reverse 2	13.6 km/h	8.5 mph
Reverse 3	24.1 km/h	15.0 mph
Reverse 4	40.0 km/h	24.9 mph

• Maximum travel speed in standard vehicle with empty bucket and standard L4 tires with 914 mm (36 in) roll radius.

Hydraulic System – 982M

Implement Pump Type	Variable Displacement Piston	
Implement System		
Maximum Pump Output (2,250 rpm)	449 L/min	119 gal/min
Maximum Operating Pressure	34 300 kPa	4,975 psi
Optional 3rd Function Maximum Flow	240 L/min	63 gal/min
Optional 3rd Function Maximum Pressure	21 780 kPa	3,159 psi
Hydraulic Cycle Time with Rated Payload:		
Raise from Carry Position	5.3 Seconds	
Dump, at Maximum Raise	1.7 Seconds	
Lower, Empty, Float Down	3.1 Seconds	
Total	10.1 Seconds	

Brakes – 982M

Brakes	Brakes meet ISO 3450:2011 standards

Axles – 982M

Front	Fixed	
Rear	Oscillating ±13 degrees	
Maximum Single-Wheel Rise and Fall	549 mm	1'10"

Service Refill Capacities – 980M

Fuel Tank	441 L	116 gal
DEF Tank	21 L	5.5 gal
Cooling System	53 L	14.0 gal
Crankcase	37 L	9.8 gal
Transmission	90 L	23.8 gal
Differentials and Final Drives – Front	84 L	22 gal
Differentials and Final Drives – Rear	84 L	22 gal
Hydraulic Tank	153 L	40 gal

Cab

ROPS/FOPS	ROPS/FOPS meet ISO 3471:2008 and ISO 3449:2005 Level II standards

Sound

The sound values indicated below are for specific operating conditions only. Machine and operator sound levels will vary at different engine and/or cooling fan speeds. Hearing protection may be needed when the machine is operated with a cabin that is not properly maintained, or when the doors and/or windows are open for extended periods or in a noisy environment.

Operator Sound Pressure Level (ISO 6396:2008)	72 dB(A)
Exterior Sound Power Level (ISO 6395:2008)	112 dB(A)*
Exterior Sound Pressure Level (SAE J88:2013)	78 dB(A)**

*For a standard machine configuration, measured according to the procedures specified with the cooling fan speed set at maximum value.

**For a standard machine configuration, measured according to the procedures specified. The measurement was conducted under the following conditions: distance of 15 m (49.2 ft), moving forward in second gear ratio with the cooling fan speed set at maximum value.

Service Refill Capacities – 982M

Fuel Tank	441 L	116 gal
DEF Tank	21 L	5.5 gal
Cooling System	53 L	14.0 gal
Crankcase	37 L	9.8 gal
Transmission	90 L	23.8 gal
Differentials and Final Drives – Front	92 L	24.3 gal
Differentials and Final Drives – Rear	92 L	24.3 gal
Hydraulic Tank	153 L	40 gal

980M Dimensions

All dimensions are approximate.

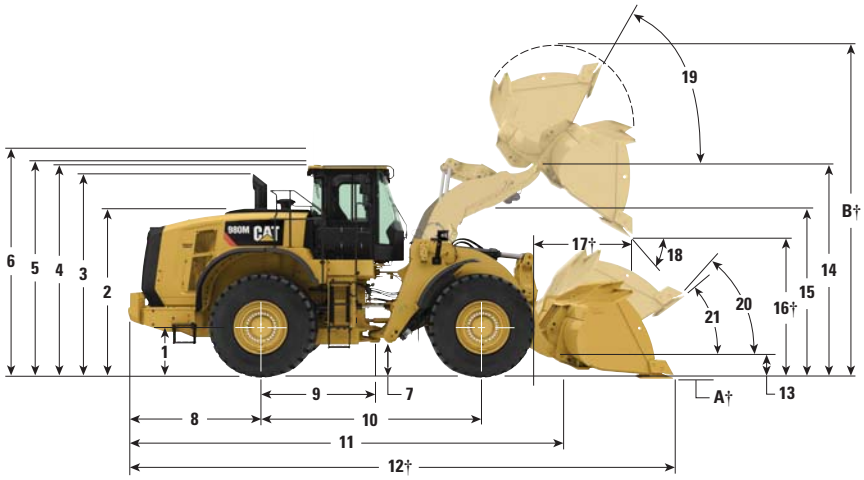

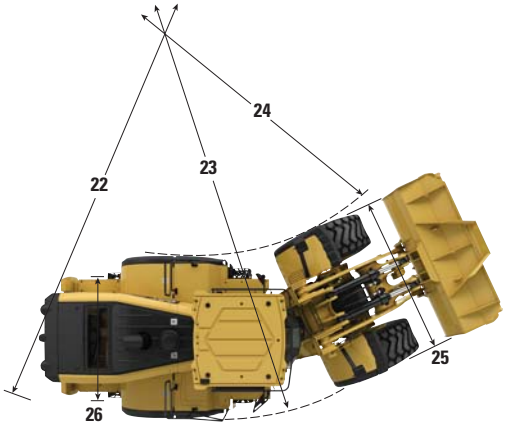

		Standard Lift		High Lift	
1	Height to Axle Centerline	892 mm	2'11"	892 mm	2'11"
2	Height to Top of Hood	3110 mm	10'3"	3110 mm	10'3"
3	Height to Top of Exhaust Pipe	3746 mm	12'4"	3746 mm	12'4"
4	Height to Top of ROPS	3813 mm	12'7"	3813 mm	12'7"
5	Height to Top of Product Link Antenna	3891 mm	12'10"	3891 mm	12'10"
6	Height to Top of Warning Beacon	4112 mm	13'6"	4112 mm	13'6"
7	Ground Clearance	453 mm	1'5"	453 mm	1'5"
8	Center Line of Rear Axle to Edge of Counterweight	2469 mm	8'2"	2469 mm	8'2"
9	Center Line of Rear Axle to Hitch	1900 mm	6'3"	1900 mm	6'3"
10	Wheelbase	3800 mm	12'6"	3800 mm	12'6"
11	Overall Length (without bucket)	7964 mm	26'2"	8164 mm	26'10"
12	Shipping Length (with bucket level on ground)*†	9493 mm	31'2"	9799 mm	32'2"
13	Hinge Pin Height at Carry Height	621 mm	2'1"	678 mm	2'3"
14	Hinge Pin Height at Maximum Lift	4539 mm	14'10"	4760 mm	15'7"
15	Lift Arm Clearance at Maximum Lift	3795 mm	12'5"	4010 mm	13'1"
16	Dump Clearance at Maximum Lift and 45° Discharge*†	3273 mm	10'9"	3493 mm	11'5"
17	Reach at Maximum Lift and 45° Discharge*†	1481 mm	4'11"	1484 mm	4'11"
18	Dump Angle at Maximum Lift and Dump (on stops)*	52 degrees		55 degrees	
19	Rack Back at Maximum Lift*	61 degrees		61 degrees	
20	Rack Back at Carry Height*	48 degrees		48 degrees	
21	Rack Back at Ground*	40 degrees		39 degrees	
22	Clearance Circle (dia) to Counterweight	13 700 mm	45'0"	13 700 mm	45'0"
23	Clearance Circle (dia) to Outside of Tires	14 806 mm	48'7"	14 806 mm	48'7"
24	Clearance Circle (dia) to Inside of Tires	8252 mm	27'1"	8252 mm	27'1"
25	Width Over Tires – Maximum (unloaded)	3265 mm	10'9"	3265 mm	10'9"
	Width Over Tires – Maximum (loaded)	3296 mm	10'10"	3296 mm	10'10"
26	Tread Width	2440 mm	8'0"	2440 mm	8'0"

*With 5.4 m^3 (7.1 yd^3) general purpose pin on bucket with BOCE (see Operating Specifications for other buckets).

†Dimensions are listed in Operating Specifications charts.

All height and tire related dimensions are with Michelin 29.5R25 XLDD1 L4 radial tires (see Tire Option Chart for other tires).
"Width Over Tires" dimensions are over the bulge and include growth.

982M Dimensions

All dimensions are approximate.

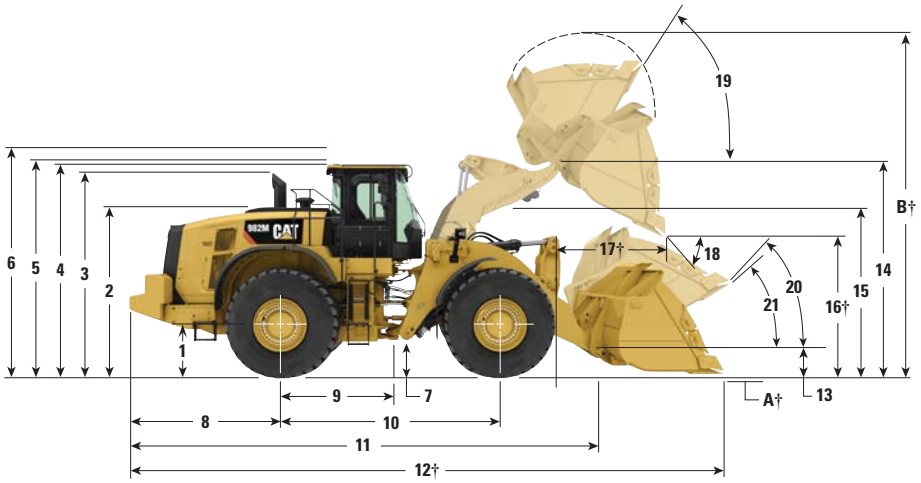

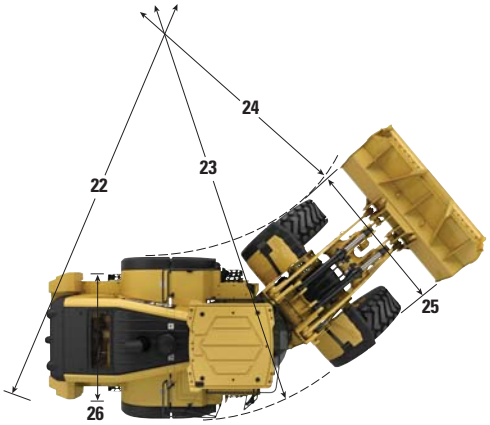

		Standard Lift	
1	Height to Axle Centerline	874 mm	2'10"
2	Height to Top of Hood	3083 mm	10'2"
3	Height to Top of Exhaust Pipe	3719 mm	12'3"
4	Height to Top of ROPS	3786 mm	12'6"
5	Height to Top of Product Link Antenna	3864 mm	12'9"
6	Height to Top of Warning Beacon	4085 mm	13'5"
7	Ground Clearance	426 mm	1'4"
8	Center Line of Rear Axle to Edge of Counterweight	2716 mm	8'11"
9	Center Line of Rear Axle to Hitch	1900 mm	6'3"
10	Wheelbase	3800 mm	12'6"
11	Overall Length (without bucket)	8584 mm	28'2"
12	Shipping Length (with bucket level on ground)*†	10 177 mm	33'5"
13	Hinge Pin Height at Carry Height	790 mm	2'8"
14	Hinge Pin Height at Maximum Lift	4743 mm	15'6"
15	Lift Arm Clearance at Maximum Lift	3884 mm	12'8"
16	Dump Clearance at Maximum Lift and 45° Discharge*†	3365 mm	11'1"
17	Reach at Maximum Lift and 45° Discharge*†	1569 mm	5'2"
18	Dump Angle at Maximum Lift and Dump (on stops)*	50 degrees	
19	Rack Back at Maximum Lift*	57 degrees	
20	Rack Back at Carry Height*	48 degrees	
21	Rack Back at Ground*	42 degrees	
22	Clearance Circle (dia) to Counterweight	13 950 mm	45'10"
23	Clearance Circle (dia) to Outside of Tires	15 026 mm	49'4"
24	Clearance Circle (dia) to Inside of Tires	8148 mm	26'9"
25	Width Over Tires – Maximum (unloaded)	3452 mm	11'4"
	Width Over Tires – Maximum (loaded)	3499 mm	11'6"
26	Tread Width	2540 mm	8'4"

*With 6.1 m^3 (8.0 yd^3) general purpose pin on bucket with BOCE (see Operating Specifications for other buckets).

†Dimensions are listed in Operating Specifications charts.

All height and tire related dimensions are with Bridgestone 875/65R29 VLTS L4 radial tires (see Tire Option Chart for other tires). "Width Over Tires" dimensions are over the bulge and include growth.

980M Tire Option Chart (Compared to Michelin XLDD1 L4)

Tire Brand	Michelin	Michelin	Michelin	Bridgestone	Bridgestone	Bridgestone
Tire Size	**29.5R25**	**29.5R25**	**29.5R25**	**29.5R25**	**29.5R25**	**29.5R25**
Tread Type	**L–3**	**L–5**	**L–5**	**L–3**	**L–4**	**L–5**
Tread Pattern	**XHA2**	**XLDD2**	**XMINE D2**	**VMT**	**VSNT**	**VSDL**
Width over Tires – Maximum (empty)*	3273 mm 10'9"	3269 mm 10'9"	3281 mm 10'10"	3257 mm 10'9"	3243 mm 10'8"	3252 mm 10'8"
Width over Tires – Maximum (loaded)*	3293 mm 10'10"	3297 mm 10'10"	3295 mm 10'10"	3284 mm 10'10"	3265 mm 10'9"	3274 mm 10'9"
Change in Vertical Dimensions (average of front and rear)	–33 mm –1.3"	–6 mm –0.3"	9 mm 0.4"	–21 mm –0.9"	4 mm 0.2"	23 mm 1"
Change in Horizontal Reach	23 mm 1"	3 mm 0.2"	3 mm 0.2"	21 mm 0.9"	1 mm 0.1"	–10 mm –0.4"
Change in Clearance Circle to Outside of Tires	–4 mm –0.2"	1 mm 0.1"	–2 mm –0.1"	–13 mm –0.5"	–32 mm –1.3"	–23 mm –1"
Change in Clearance Circle to Inside of Tires	4 mm 0.2"	–1 mm –0.1"	2 mm 0.1"	13 mm 0.5"	32 mm 1.3"	23 mm 1"
Change in Operating Weight (without Ballast)	–544 kg –1,200 lb	364 kg 803 lb	688 kg 1,517 lb	–356 kg –785 lb	156 kg 344 lb	864 kg 1,905 lb

*Width over tire bulge and includes tire growth.

Changes Specific to the 980M

Tire Brand	Michelin	Michelin	Michelin	Bridgestone	Bridgestone	Bridgestone
Tire Size	**29.5R25**	**29.5R25**	**29.5R25**	**29.5R25**	**29.5R25**	**29.5R25**
Tread Type	**L–3**	**L–5**	**L–5**	**L–3**	**L–4**	**L–5**
Tread Pattern	**XHA2**	**XLDD2**	**XMINE D2**	**VMT**	**VSNT**	**VSDL**
Change in Static Tipping Load – Straight	–411 kg –906 lb	275 kg 606 lb	519 kg 1,146 lb	–269 kg –593 lb	118 kg 260 lb	652 kg 1,439 lb
Change in Static Tipping Load – Articulated	–357 kg –788 lb	239 kg 528 lb	452 kg 997 lb	–234 kg –516 lb	102 kg 226 lb	568 kg 1,252 lb

982M Tire Option Chart (Compared to Bridgestone 875/65R29 VLTS L4)

Tire Brand	Michelin	Bridgestone	Bridgestone
Tire Size	**875/65R29**	**875/65R29**	**29.5R29**
Tread Type	**L-3**	**L-3**	**L-5**
Tread Pattern	**XHA2**	**VTS**	**VSDL**
Width over Tires – Maximum (empty)*	3473 mm 11'5"	3447 mm 11'4"	3425 mm 11'3"
Width over Tires – Maximum (loaded)*	3504 mm 11'6"	3472 mm 11'5"	3448 mm 11'4"
Change in Vertical Dimensions (average of front and rear)	–6 mm –0.3"	–7 mm –0.3"	82 mm 3.3"
Change in Horizontal Reach	–1 mm –0.1"	2 mm 0.1"	–70 mm –2.8"
Change in Clearance Circle to Outside of Tires	28 mm 1.2"	–4 mm –0.2"	–28 mm –1.2"
Change in Clearance Circle to Inside of Tires	–28 mm –1.2"	4 mm 0.2"	28 mm 1.2"
Change in Operating Weight (without Ballast)	–356 kg –785 lb	–76 kg –168 lb	1008 kg 2,223 lb

*Width over tire bulge and includes tire growth.

Changes Specific to the 982M

Tire Brand	Michelin	Bridgestone	Bridgestone
Tire Size	**875/65R29**	**875/65R29**	**29.5R29**
Tread Type	**L-3**	**L-3**	**L-5**
Tread Pattern	**XHA2**	**VTS**	**VSDL**
Change in Static Tipping Load – Straight	–236 kg –520 lb	–50 kg –111 lb	667 kg 1,472 lb
Change in Static Tipping Load – Articulated	–206 kg –454 lb	–44 kg –97 lb	583 kg 1,285 lb

980M Bucket Fill Factors and Selection Chart

The bucket size must be chosen based on the density of the material and on the expected fill factor. The new Cat Performance Series Buckets with longer floor, larger bucket opening, increased repository angle, rounded side boards and integrated spill guard, demonstrate fill factors significantly higher than previous generation or non Cat buckets. The actual volume handled by the machine is thus often larger than the rated capacity.

Loose Material		Fill Factor (%)*	Material Density
Earth/Clay		115	1.5-1.7
Sand and Gravel		115	1.5-1.7
Aggregate:	25-76 mm (1 to 3 in)	110	1.6-1.7
	19 mm (0.75 in) and smaller	105	1.8
Rock:	76 mm (3 in) and larger	100	1.6

*As a % of ISO rated capacity.

Note: Fill Factors achieved will also depend on whether the product is washed or not washed.

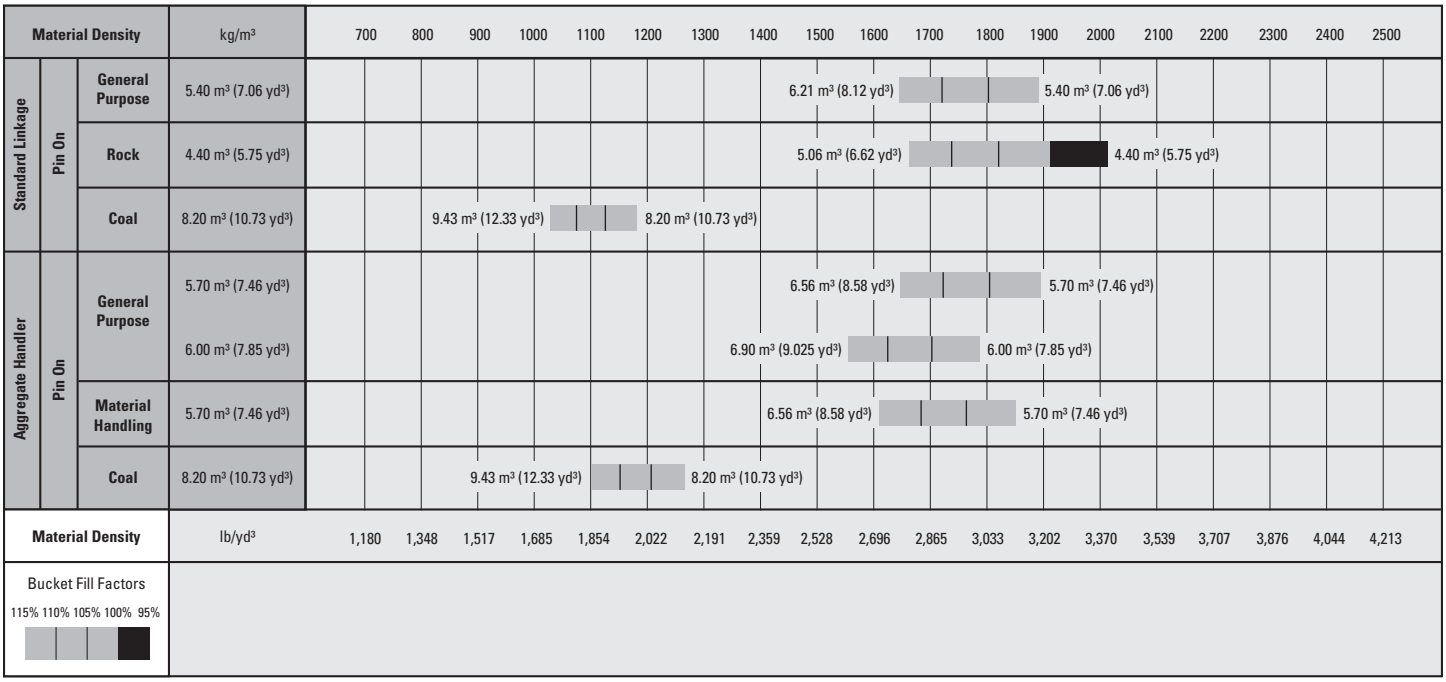

Note: All buckets are showing Bolt-On Edges.

980M/982M Wheel Loaders Specifications

980M Operating Specifications with Buckets

Linkage		Standard Linkage			Standard Linkage			Standard Linkage
Bucket Type		General Purpose – Pin On			Rock – Pin On***			Coal – Pin On
Edge Type		Bolt-On Cutting Edges	Teeth and Segments	Tips	Bolt-On Cutting Edges	Teeth and Segments	Tips	Bolt-On Cutting Edges
Capacity – Rated	m^3	5.40	5.40	5.00	4.40	4.40	4.30	8.20
	yd^3	7.06	7.06	6.54	5.75	5.75	5.62	10.73
Capacity – 110%	m^3	5.94	5.94	5.50	4.84	4.84	4.73	9.02
	yd^3	7.77	7.77	7.19	6.33	6.33	6.19	11.80
Width	mm	3447	3535	3535	3504	3504	3504	3638
	ft/in	11'3"	11'7"	11'7"	11'5"	11'5"	11'5"	11'11"
16† Dump Clearance at Maximum Lift and 45° Discharge	mm	3273	3107	3107	3101	3101	3101	2917
	ft/in	10'8"	10'2"	10'2"	10'2"	10'2"	10'2"	9'6"
17† Reach at Maximum Lift and 45° Discharge	mm	1481	1618	1618	1769	1769	1769	1625
	ft/in	4'10"	5'3"	5'3"	5'9"	5'9"	5'9"	5'3"
Reach at Level Lift Arm and Bucket Level	mm	2965	3177	3177	3285	3285	3285	3336
	ft/in	9'8"	10'5"	10'5"	10'9"	10'9"	10'9"	10'11"
A† Digging Depth	mm	103	103	68	106	106	71	108
	in	4"	4"	2.6"	4.1"	4.1"	2.8"	4.2"
12† Overall Length	mm	9493	9734	9734	9828	9828	9828	9867
	ft/in	31'2"	32'0"	32'0"	32'3"	32'3"	32'3"	32'5"
B† Overall Height with Bucket at Maximum Lift	mm	6421	6421	6421	6184	6184	6184	6536
	ft/in	21'1"	21'1"	21'1"	20'4"	20'4"	20'4"	21'6"
Loader Clearance Circle with Bucket at Carry Position	mm	15 223	15 451	15 451	15 469	15 469	15 469	15 609
	ft/in	50'0"	50'9"	50'9"	50'10"	50'9"	50'9"	51'3"
Static Tipping Load, Straight (ISO)*	kg	22 639	22 453	22 897	22 987	23 033	23 504	21 615
	lb	49,897	49,488	50,466	50,664	50,766	51,803	47,639
Static Tipping Load, Straight (Rigid Tire)*	kg	24 023	23 835	24 297	24 375	24 431	24 912	23 054
	lb	52,946	52,533	53,551	53,722	53,848	54,907	50,811
Static Tipping Load, Articulated (ISO)*	kg	19 565	19 379	19 795	19 851	19 875	20 337	18 575
	lb	43,121	42,712	43,629	43,752	43,806	44,822	40,941
Static Tipping Load, Articulated (Rigid Tire)*	kg	20 796	20 608	21 040	21 083	21 117	21 587	19 864
	lb	45,834	45,421	46,373	46,467	46,542	47,578	43,781
Breakout Force (§)	kN	224	222	239	210	210	227	175
	lbf	50,466	49,926	53,816	47,384	47,195	51,049	39,467
Operating Weight*	kg	30 090	30 228	30 053	30 612	30 687	30 392	30 677
	lb	66,318	66,623	66,236	67,469	67,634	66,984	67,612

* Static tipping loads and operating weights shown are based on a machine configuration with Michelin 29.5R25 XLDD1 L4 radial tires, full fluids, operator, standard counterweight, cold start, roading fenders, Product Link, limited slip differentials, power train guard, secondary steering and sound suppression.

† Illustration shown with Dimension charts.

*** Rock bucket specifications are given on Michelin 29.5R25 XLDD2 L5 Radial tires.

(§) Measured 102 mm (4") behind tip of cutting edge with bucket hinge pin as pivot point in accordance with SAE J732C.

(§) Specifications and ratings conform to all applicable standards recommended by the Society of Automotive Engineers, including SAE Standard J732C governing loader ratings.

(ISO) Full compliance to ISO 14397-1 (2007) Sections 1 thru 6, which requires 2% verification between calculations and testing.

(Rigid Tire) Compliance to ISO 14397-1 (2007) Sections 1 thru 5.

Other buckets are available and offerings vary by region. Consult your local Cat dealer for further details.

980M Operating Specifications with Buckets

	Linkage		
	Bucket Type		
	Edge Type		**High Lift Delta**
	Capacity – Rated	m^3	—
		yd^3	—
	Capacity – 110%	m^3	—
		yd^3	—
	Width	mm	—
		ft/in	—
16†	Dump Clearance at Maximum Lift and 45° Discharge	mm	221
		ft/in	0'8"
17†	Reach at Maximum Lift and 45° Discharge	mm	—
		ft/in	—
	Reach at Level Lift Arm and Bucket Level	mm	160
		ft/in	0'6"
A†	Digging Depth	mm	—
		in	—
12†	Overall Length	mm	201
		ft/in	0'7"
B†	Overall Height with Bucket at Maximum Lift	mm	221
		ft/in	0'8"
	Loader Clearance Circle with Bucket at Carry Position	mm	1009
		ft/in	3'3"
	Static Tipping Load, Straight (ISO)*	kg	(2002)
		lb	(4,413)
	Static Tipping Load, Straight (Rigid Tire)*	kg	(2212)
		lb	(4,875)
	Static Tipping Load, Articulated (ISO)*	kg	(1365)
		lb	(3,008)
	Static Tipping Load, Articulated (Rigid Tire)*	kg	(1547)
		lb	(3,410)
	Breakout Force (§)	kN	19
		lbf	4,190
	Operating Weight*	kg	115
		lb	253

* Static tipping loads and operating weights shown are based on a machine configuration with Michelin 29.5R25 XLDD1 L4 radial tires, full fluids, operator, standard counterweight, cold start, roading fenders, Product Link, limited slip differentials, power train guard, secondary steering and sound suppression.

† Illustration shown with Dimension charts.

(§) Measured 102 mm (4") behind tip of cutting edge with bucket hinge pin as pivot point in accordance with SAE J732C.

(§) Specifications and ratings conform to all applicable standards recommended by the Society of Automotive Engineers, including SAE Standard J732C governing loader ratings.

(ISO) Full compliance to ISO 14397-1 (2007) Sections 1 thru 6, which requires 2% verification between calculations and testing.

(Rigid Tire) Compliance to ISO 14397-1 (2007) Sections 1 thru 5.

Other buckets are available and offerings vary by region. Consult your local Cat dealer for further details.

980M Operating Specifications with Buckets – Aggregate Handler

Package		Aggregate Handler**		Aggregate Handler**	Aggregate Handler**
Bucket Type		General Purpose – Pin On		Material Handler – Pin On	Coal – Pin On
Edge Type		Bolt-On Cutting Edges	Bolt-On Cutting Edges	Bolt-On Cutting Edges	Bolt-On Cutting Edges
Capacity – Rated	m^3	5.70	6.00	5.70	8.20
	yd^3	7.46	7.85	7.46	10.73
Capacity – 110%	m^3	6.27	6.60	6.27	9.02
	yd^3	8.20	8.63	8.20	11.80
Width	mm	3447	3447	3447	3638
	ft/in	11'3"	11'3"	11'3"	11'11"
16† Dump Clearance at Maximum Lift and 45° Discharge	mm	3204	3187	3105	2917
	ft/in	10'6"	10'5"	10'2"	9'6"
17† Reach at Maximum Lift and 45° Discharge	mm	1529	1550	1444	1625
	ft/in	5'0"	5'1"	4'8"	5'3"
Reach at Level Lift Arm and Bucket Level	mm	3049	3077	3074	3336
	ft/in	10'0"	10'1"	10'1"	10'11"
A† Digging Depth	mm	103	103	103	108
	in	4"	4"	4"	4.2"
12† Overall Length	mm	9638	9666	9663	9928
	ft/in	31'8"	31'9"	31'9"	32'7"
B† Overall Height with Bucket at Maximum Lift	mm	6243	6269	6242	6536
	ft/in	20'6"	20'7"	20'6"	21'6"
Loader Clearance Circle with Bucket at Carry Position	mm	15 270	15 285	15 284	15 609
	ft/in	50'2"	50'2"	50'2"	51'3"
Static Tipping Load, Straight (ISO)*	kg	23 972	23 827	23 447	23 180
	lb	52,835	52,515	51,677	51,088
Static Tipping Load, Straight (Rigid Tire)*	kg	25 481	25 339	24 909	24 750
	lb	56,161	55,847	54,901	54,550
Static Tipping Load, Articulated (ISO)*	kg	20 630	20 491	20 163	19 857
	lb	45,470	45,162	44,440	43,765
Static Tipping Load, Articulated (Rigid Tire)*	kg	21 997	21 860	21 488	21 286
	lb	48,482	48,180	47,360	46,914
Breakout Force (§)	kN	211	207	208	175
	lbf	47,618	46,676	46,782	39,467
Operating Weight*	kg	30 822	30 918	30 947	31 326
	lb	67,931	68,143	68,207	69,042

* Static tipping loads and operating weights shown are based on a machine configuration with Michelin 29.5R25 XLDD1 L4 radial tires, full fluids, operator, aggregate counterweight, cold start, roading fenders, Product Link, limited slip differentials, power train guard, secondary steering and sound suppression. If a rock bucket is added, those values are with Michelin 26.5R25 XLDD2 L5 tires.

** Aggregate Handler configuration is not compatible with teeth and segments, tips, rock buckets, high lift, L5 tires.

† Illustration shown with Dimension charts.

(§) Measured 102 mm (4") behind tip of cutting edge with bucket hinge pin as pivot point in accordance with SAE J732C.

(§) Specifications and ratings conform to all applicable standards recommended by the Society of Automotive Engineers, including SAE Standard J732C governing loader ratings.

(ISO) Full compliance to ISO 14397-1 (2007) Sections 1 thru 6, which requires 2% verification between calculations and testing.

(Rigid Tire) Compliance to ISO 14397-1 (2007) Sections 1 thru 5.

Other buckets are available and offerings vary by region. Consult your local Cat dealer for further details.

982M Bucket Fill Factors and Selection Chart

The bucket size must be chosen based on the density of the material and on the expected fill factor. The new Cat Performance Series Buckets with longer floor, larger bucket opening, increased repository angle, rounded side boards and integrated spill guard, demonstrate fill factors significantly higher than previous generation or non Cat buckets. The actual volume handled by the machine is thus often larger than the rated capacity.

Loose Material		Fill Factor (%)*	Material Density
Earth/Clay		115	1.5-1.7
Sand and Gravel		115	1.5-1.7
Aggregate:	25-76 mm (1 to 3 in)	110	1.6-1.7
	19 mm (0.75 in) and smaller	105	1.8
Rock:	76 mm (3 in) and larger	100	1.6

*As a % of ISO rated capacity.

Note: Fill Factors achieved will also depend on whether the product is washed or not washed.

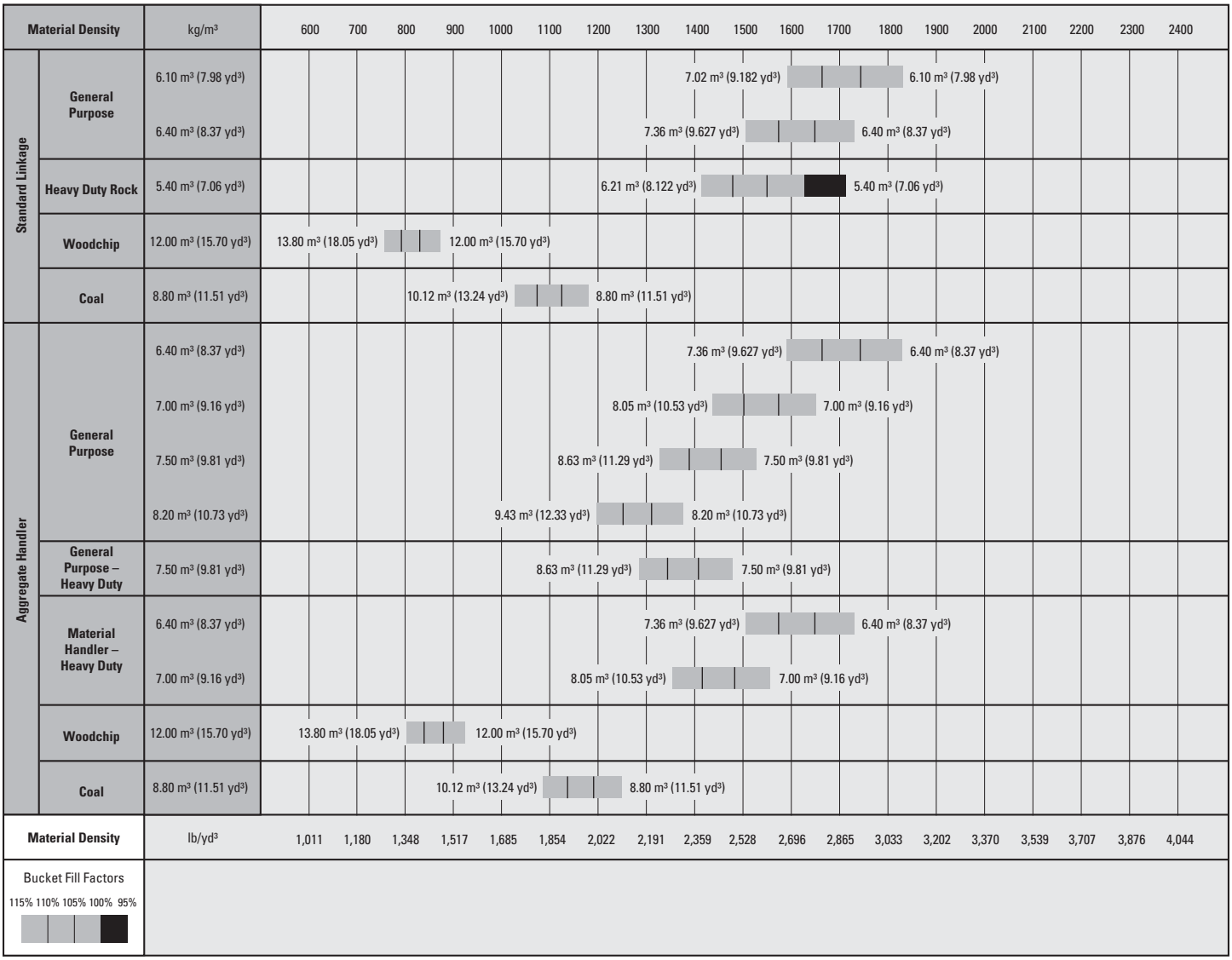

Note: All buckets are showing Bolt-On Edges.

982M Operating Specifications with Buckets

Linkage		Standard Linkage			Standard Linkage		
Bucket Type		General Purpose			General Purpose		
Edge Type		Bolt-On Cutting Edges	Teeth and Segments	Tips	Bolt-On Cutting Edges	Teeth and Segments	Tips
Capacity – Rated	m^3	6.10	6.10	5.70	6.40	6.40	6.10
	yd^3	7.98	7.98	7.46	8.37	8.37	7.98
Capacity – 110%	m^3	6.71	6.71	6.27	7.04	7.04	6.71
	yd^3	8.78	8.78	8.20	9.21	9.21	8.78
Width	mm	3602	3665	3665	3602	3665	3665
	ft/in	11'9"	12'0"	12'0"	11'9"	12'0"	12'0"
16† Dump Clearance at Maximum Lift and 45° Discharge	mm	3365	3197	3197	3327	3159	3159
	ft/in	11'0"	10'5"	10'5"	10'11"	10'4"	10'4"
17† Reach at Maximum Lift and 45° Discharge	mm	1569	1703	1703	1602	1735	1735
	ft/in	5'1"	5'7"	5'7"	5'3"	5'8"	5'8"
Reach at Level Lift Arm and Bucket Level	mm	3257	3468	3468	3307	3518	3518
	ft/in	10'8"	11'4"	11'4"	10'10"	11'6"	11'6"
A† Digging Depth	mm	116	116	81	116	116	81
	in	4.5"	4.5"	3.2"	4.5"	4.5"	3.2"
12† Overall Length	mm	10 178	10 412	10 412	10 228	10 462	10 462
	ft/in	33'5"	34'2"	34'2"	33'7"	34'4"	34'4"
B† Overall Height with Bucket at Maximum Lift	mm	6592	6592	6592	6642	6642	6642
	ft/in	21'8"	21'8"	21'8"	21'10"	21'10"	21'10"
Loader Clearance Circle with Bucket at Carry Position	mm	15 770	15 986	15 986	15 801	16 018	16 018
	ft/in	51'9"	52'6"	52'6"	51'11"	52'7"	52'7"
Static Tipping Load, Straight (ISO)*	kg	24 791	24 692	25 112	24 620	24 521	24 952
	lb	54,640	54,422	55,347	54,264	54,045	54,994
Static Tipping Load, Straight (Rigid Tire)*	kg	26 101	26 001	26 439	25 938	25 838	26 285
	lb	57,527	57,308	58,272	57,169	56,948	57,933
Static Tipping Load, Articulated (ISO)*	kg	21 080	20 981	21 370	20 918	20 819	21 217
	lb	46,462	46,243	47,100	46,105	45,885	46,763
Static Tipping Load, Articulated (Rigid Tire)*	kg	22 393	22 293	22 699	22 239	22 138	22 552
	lb	49,354	49,135	50,029	49,015	48,794	49,706
Breakout Force (§)	kN	260	259	278	251	251	269
	lbf	58,531	58,375	62,671	56,572	56,417	60,459
Operating Weight*	kg	35 563	35 636	35 476	35 655	35 727	35 567
	lb	78,382	78,542	78,189	78,583	78,742	78,389

* Static tipping loads and operating weights shown are based on a machine configuration with Bridgestone 875/65R29 VLTS L4 radial tires, full fluids, operator, standard counterweight, cold start, roading fenders, Product Link, limited slip differentials, power train guard, secondary steering and sound suppression.

† Illustration shown with Dimension charts.

(§) Measured 102 mm (4") behind tip of cutting edge with bucket hinge pin as pivot point in accordance with SAE J732C.

(§) Specifications and ratings conform to all applicable standards recommended by the Society of Automotive Engineers, including SAE Standard J732C governing loader ratings.

(ISO) Full compliance to ISO 14397-1 (2007) Sections 1 thru 6, which requires 2% verification between calculations and testing.

(Rigid Tire) Compliance to ISO 14397-1 (2007) Sections 1 thru 5.

Other buckets are available and offerings vary by region. Consult your local Cat dealer for further details.

982M Operating Specifications with Buckets

Linkage		Standard Linkage			Standard Linkage	Standard Linkage
Bucket Type		Heavy Duty Rock			Woodchip	Coal
Edge Type		Bolt-On Cutting Edges	Teeth and Segments	Tips	Bolt-On Cutting Edges	Bolt-On Cutting Edges
Capacity – Rated	m^3	5.40	5.40	5.10	12.00	8.80
	yd^3	7.06	7.06	6.67	15.70	11.51
Capacity – 110%	m^3	5.94	5.94	5.61	13.20	9.68
	yd^3	7.77	7.77	7.34	17.26	12.66
Width	mm	3648	3648	3648	4174	3639
	ft/in	11'11"	11'11"	11'11"	13'8"	11'11"
16† Dump Clearance at Maximum Lift and 45° Discharge	mm	3253	3136	3136	3022	3017
	ft/in	10'8"	10'3"	10'3"	9'10"	9'10"
17† Reach at Maximum Lift and 45° Discharge	mm	1794	1915	1915	1738	1743
	ft/in	5'10"	6'3"	6'3"	5'8"	5'8"
Reach at Level Lift Arm and Bucket Level	mm	3489	3657	3657	3638	3645
	ft/in	11'5"	11'11"	11'11"	11'11"	11'11"
A† Digging Depth	mm	107	107	72	119	119
	in	4.2"	4.2"	2.8"	4.7"	4.7"
12† Overall Length	mm	10 410	10 586	10 586	10 561	10 568
	ft/in	34'2"	34'9"	34'9"	34'8"	34'9"
B† Overall Height with Bucket at Maximum Lift	mm	6540	6540	6540	7059	6962
	ft/in	21'6"	21'6"	21'6"	23'2"	22'11"
Loader Clearance Circle with Bucket at Carry Position	mm	15 955	16 073	16 073	16 516	16 049
	ft/in	52'5"	52'9"	52'9"	54'3"	52'8"
Static Tipping Load, Straight (ISO)*	kg	23 940	23 809	24 303	23 472	23 229
	lb	52,764	52,475	53,565	51,734	51,198
Static Tipping Load, Straight (Rigid Tire)*	kg	25 241	25 108	25 614	24 881	24 545
	lb	55,631	55,339	56,454	54,838	54,098
Static Tipping Load, Articulated (ISO)*	kg	20 193	20 062	20 537	19 784	19 630
	lb	44,505	44,217	45,264	43,605	43,264
Static Tipping Load, Articulated (Rigid Tire)*	kg	21 497	21 364	21 851	21 191	20 949
	lb	47,380	47,088	48,160	46,706	46,172
Breakout Force (§)	kN	233	232	249	203	203
	lbf	52,456	52,261	56,145	45,653	45,761
Operating Weight*	kg	36 601	36 694	36 420	36 512	36 233
	lb	80,669	80,874	80,270	80,473	79,858

* Static tipping loads and operating weights shown are based on a machine configuration with Bridgestone 875/65R29 VLTS L4 radial tires, full fluids, operator, standard counterweight, cold start, roading fenders, Product Link, limited slip differentials, power train guard, secondary steering and sound suppression.

† Illustration shown with Dimension charts.

(§) Measured 102 mm (4") behind tip of cutting edge with bucket hinge pin as pivot point in accordance with SAE J732C.

(§) Specifications and ratings conform to all applicable standards recommended by the Society of Automotive Engineers, including SAE Standard J732C governing loader ratings.

(ISO) Full compliance to ISO 14397-1 (2007) Sections 1 thru 6, which requires 2% verification between calculations and testing.

(Rigid Tire) Compliance to ISO 14397-1 (2007) Sections 1 thru 5.

Other buckets are available and offerings vary by region. Consult your local Cat dealer for further details.

982M Operating Specifications with Buckets – Aggregate Handler

Package		Aggregate Handler**				Aggregate Handler**
Bucket Type		General Purpose				General Purpose – Heavy Duty
Edge Type		Bolt-On Cutting Edges	Bolt-On Cutting Edges	Bolt-On Cutting Edges	Bolt-On Cutting Edges	Bolt-On Cutting Edges
Capacity – Rated	m^3	6.40	7.00	7.50	8.20	7.50
	yd^3	8.37	9.16	9.81	10.73	9.81
Capacity – 110%	m^3	7.04	7.70	8.25	9.02	8.25
	yd^3	9.21	10.07	10.79	11.80	10.79
Width	mm	3602	3602	3602	3602	3602
	ft/in	11'9"	11'9"	11'9"	11'9"	11'9"
16† Dump Clearance at Maximum Lift and 45° Discharge	mm	3327	3277	3227	3154	3236
	ft/in	10'11"	10'9"	10'7"	10'4"	10'7"
17† Reach at Maximum Lift and 45° Discharge	mm	1602	1644	1689	1755	1697
	ft/in	5'3"	5'4"	5'6"	5'9"	5'6"
Reach at Level Lift Arm and Bucket Level	mm	3307	3374	3442	3542	3442
	ft/in	10'10"	11'0"	11'3"	11'7"	11'3"
A† Digging Depth	mm	116	116	116	116	104
	in	4.5"	4.5"	4.5"	4.5"	4.1"
12† Overall Length	mm	10 335	10 402	10 470	10 570	10 462
	ft/in	33'11"	34'2"	34'5"	34'9"	34'4"
B† Overall Height with Bucket at Maximum Lift	mm	6642	6709	6776	6870	6779
	ft/in	21'10"	22'1"	22'3"	22'7"	22'3"
Loader Clearance Circle with Bucket at Carry Position	mm	15 801	15 842	15 885	15 948	15 876
	ft/in	51'11"	52'0"	52'2"	52'4"	52'2"
Static Tipping Load, Straight (ISO)*	kg	26 038	25 761	25 552	25 217	24 863
	lb	57,389	56,779	56,316	55,578	54,799
Static Tipping Load, Straight (Rigid Tire)*	kg	27 454	27 186	26 985	26 661	26 293
	lb	60,510	59,918	59,475	58,762	57,949
Static Tipping Load, Articulated (ISO)*	kg	22 083	21 816	21 618	21 299	20 924
	lb	48,672	48,084	47,647	46,944	46,116
Static Tipping Load, Articulated (Rigid Tire)*	kg	23 507	23 249	23 058	22 751	22 361
	lb	51,809	51,240	50,821	50,144	49,283
Breakout Force (§)	kN	251	240	230	216	227
	lbf	56,572	54,068	51,768	48,643	51,178
Operating Weight*	kg	36 302	36 483	36 589	36 774	37 265
	lb	80,009	80,408	80,641	81,049	82,131

* Static tipping loads and operating weights shown are based on a machine configuration with Bridgestone 875/65R29 VLTS L4 radial tires, full fluids, operator, aggregate counterweight, cold start, roading fenders, Product Link, limited slip differentials, power train guard, secondary steering and sound suppression.

** Aggregate Handler configuration is not compatible with teeth and segments, tips, rock buckets, high lift, L5 tires.

† Illustration shown with Dimension charts.

(§) Measured 102 mm (4") behind tip of cutting edge with bucket hinge pin as pivot point in accordance with SAE J732C.

(§) Specifications and ratings conform to all applicable standards recommended by the Society of Automotive Engineers, including SAE Standard J732C governing loader ratings.

(ISO) Full compliance to ISO 14397-1 (2007) Sections 1 thru 6, which requires 2% verification between calculations and testing.

(Rigid Tire) Compliance to ISO 14397-1 (2007) Sections 1 thru 5.

Other buckets are available and offerings vary by region. Consult your local Cat dealer for further details.

982M Operating Specifications with Buckets – Aggregate Handler

Package		Aggregate Handler**		Aggregate Handler**	Aggregate Handler**
Bucket Type		Material Handling – Heavy Duty		Woodchip	Coal
Edge Type		Bolt-On Cutting Edges	Bolt-On Cutting Edges	Bolt-On Cutting Edges	Bolt-On Cutting Edges
Capacity – Rated	m^3	6.40	7.00	12.00	8.80
	yd^3	8.37	9.16	15.70	11.51
Capacity – 110%	m^3	7.04	7.70	13.20	9.68
	yd^3	9.21	10.07	17.26	12.66
Width	mm	3602	3602	4174	3639
	ft/in	11'9"	11'9"	13'8"	11'11"
16† Dump Clearance at Maximum Lift and 45° Discharge	mm	3264	3200	3022	3017
	ft/in	10'8"	10'6"	9'10"	9'10"
17† Reach at Maximum Lift and 45° Discharge	mm	1518	1581	1738	1743
	ft/in	4'11"	5'2"	5'8"	5'8"
Reach at Level Lift Arm and Bucket Level	mm	3311	3401	3638	3645
	ft/in	10'10"	11'1"	11'11"	11'11"
A† Digging Depth	mm	104	104	119	119
	in	4.1"	4.1"	4.7"	4.7"
12† Overall Length	mm	10 331	10 421	10 668	10 675
	ft/in	33'11"	34'3"	35'0"	35'1"
B† Overall Height with Bucket at Maximum Lift	mm	6622	6709	7059	6962
	ft/in	21'9"	22'1"	23'2"	22'11"
Loader Clearance Circle with Bucket at Carry Position	mm	15 794	15 850	16 516	16 049
	ft/in	51'10"	52'0"	54'3"	52'8"
Static Tipping Load, Straight (ISO)*	kg	24 813	24 471	24 878	24 604
	lb	54,689	53,935	54,831	54,228
Static Tipping Load, Straight (Rigid Tire)*	kg	26 181	25 850	26 392	26 018
	lb	57,704	56,973	58,170	57,344
Static Tipping Load, Articulated (ISO)*	kg	20 907	20 578	20 937	20 758
	lb	46,079	45,354	46,145	45,751
Static Tipping Load, Articulated (Rigid Tire)*	kg	22 285	21 966	22 456	22 181
	lb	49,116	48,414	49,493	48,888
Breakout Force (§)	kN	247	232	203	203
	lbf	55,612	52,320	45,653	45,761
Operating Weight*	kg	37 148	37 355	37 159	36 880
	lb	81,873	82,330	81,899	81,284

* Static tipping loads and operating weights shown are based on a machine configuration with Bridgestone 875/65R29 VLTS L4 radial tires, full fluids, operator, aggregate counterweight, cold start, roading fenders, Product Link, limited slip differentials, power train guard, secondary steering and sound suppression.

** Aggregate Handler configuration is not compatible with teeth and segments, tips, rock buckets, high lift, L5 tires.

† Illustration shown with Dimension charts.

(§) Measured 102 mm (4") behind tip of cutting edge with bucket hinge pin as pivot point in accordance with SAE J732C.

(§) Specifications and ratings conform to all applicable standards recommended by the Society of Automotive Engineers, including SAE Standard J732C governing loader ratings.

(ISO) Full compliance to ISO 14397-1 (2007) Sections 1 thru 6, which requires 2% verification between calculations and testing.

(Rigid Tire) Compliance to ISO 14397-1 (2007) Sections 1 thru 5.

Other buckets are available and offerings vary by region. Consult your local Cat dealer for further details.

Standard Equipment

Standard equipment may vary. Consult your Cat dealer for details.

OPERATOR ENVIRONMENT

- Cab, pressurized and sound suppressed (ROPS/FOPS)
- Viscous mounts
- Multi-function 18 cm (7 in) color LCD touch-screen display for rear vision camera and machine parameters.
- Electro-hydraulic controls, SAL (single axis lever) lift and tilt function
- Steering, electro-hydraulic joystick, speed sensing with force feedback
- Radio ready (entertainment) includes antenna, speakers and converter (12V, 10-amp)
- Air conditioner, heater, and defroster (auto temp and fan)
- Electro-hydraulic parking brake
- Beverage holders (2) with storage compartment for cell phone/MP3 player
- Bucket/work tool function lockout
- Coat hook (2)
- Cab air filter
- Ergonomic cab access ladders and handrails
- Horn, electric
- Light, two dome (cab)
- Mirrors, rearview external with integrated spot mirrors
- Post mounted membrane 16 switch keypad
- 3 receptacles, 12V
- Seat, Cat Comfort (cloth) air suspension
- Seat belt, 51 mm (2 in) retractable, with indicator
- Sun visor, front
- Wet-arm wipers/washers front and rear, intermittent front wiper
- Window, sliding (left and right sides)
- Cab tie-off

COMPUTERIZED MONITORING SYSTEM

- With following gauges:
  - Speedometer/tachometer
  - Digital gear range indicator
  - Diesel Exhaust Fluid (DEF) level
  - Temperature: engine coolant, hydraulic oil, transmission oil
  - Fuel level
- With following warning indicators:
  - Regeneration
  - Temperature: axle oil, engine intake manifold
  - Pressure: engine oil, fuel pressure hi/low, primary steering oil, service brake oil
  - Battery voltage hi/low
  - Engine air filter restriction
  - Hydraulic oil filter restriction
  - Hydraulic oil low
  - Parking brake
  - DEF low level
  - Transmission filter bypass

ELECTRICAL AND LIGHTING

- Batteries (2), maintenance free 1,400 CCA
- Ignition key; start/stop switch
- Starter, electric, heavy duty
- Starting and charging system (24V)
- Lighting system:
  - Four halogen work lights (cab mounted)
  - Two halogen roading lights (with signals)
  - Two halogen rear vision lights (hood mounted)
- Alarm, back-up
- Alternator, 145-amp brushed
- Main disconnect switch
- Receptacle start (cables not included)

CAT CONNECT TECHNOLOGIES

- Link technologies: Product Link
- Detect technologies: rear vision camera

POWER TRAIN

- Engine, C13 ACERT meets Tier 4 Final emission standards
- Cat Clean Emissions Module (CEM) with Diesel Particulate Filter (DPF) and remote Diesel Exhaust Fluid tank and pump
- Fuel priming pump (electric)
- Fuel/water separator
- Precleaner, engine air intake
- Economy mode (selectable)
- Transmission, automatic planetary power shift (4F/4R)
- Torque converter, locking clutch with free wheel stator
- Switch, transmission neutralizer lockout
- Axles, open differential, front and rear
- Heavy duty transmission (982 only)
- Axles, ecology drains
- Brakes, full hydraulic enclosed wet-disc with Integrated Braking System (IBS)
- Brake wear indicators
- Parking brake, disc and caliper
- Fan, radiator, on demand

LINKAGE

- Linkage, Z-bar, cast crosstube/tilt levers
- Kickout, lift and tilt, automatic (adjustable in cab)

HYDRAULICS

- Hydraulic system, load sensing
- Steering, load sensing
- Ride control, 2V
- Remote diagnostic pressure taps
- Hoses, Cat XT™
- Couplings, Cat O-ring face seal
- Hydraulic oil cooler (swing out)
- Oil sampling valves

FLUIDS

- Premixed extended life coolant with freeze protection to –34° C (–29° F)

OTHER STANDARD EQUIPMENT

- One-piece tilting hood with side and rear doors
- Service centers (electrical and hydraulic)
- Platform, window washing
- Auto idle shutdown
- Fenders, non-metallic front with mud-flap/ rear with extension
- Ecology drains for engine, transmission, and hydraulics
- Ether aid ready
- Grill, airborne debris
- Filters: fuel, engine air, engine oil, hydraulic oil, transmission
- Fuel cooler
- Grease zerks
- Hitch, drawbar with pin
- Precleaner rain cap
- Sight gauges: engine coolant, hydraulic oil, and transmission oil level
- Toolbox
- Vandalism protection caplocks

Optional Equipment

Optional equipment may vary. Consult your Cat dealer for details.

OPERATOR ENVIRONMENT

- Door, remote opening system
- Cover, HVAC metallic
- EH controls, SAL 3rd function
- EH controls, joystick lift and tilt
  - Additional integrated roller switch for 3rd function
- Filter, carbon fresh air
- Mirrors, heated rearview external with integrated spot mirrors
- Precleaner, HVAC
- Precleaner, HVAC (RESPA)
- Radio, AM/FM/USB/MP3 Bluetooth
- Radio, AM/FM/CD/USB/MP3 Bluetooth
- Radio, AM/FM/CD/USB/MP3 Bluetooth with Satellite Sirius and XM
- Radio, CB ready
- Seat, heated air suspension
- Seat belt, 76 mm (3 in) retractable, with indicator
- Steering, EH wheel with directional FNR shifter and gear selector
  - Additional FNR with implement controls
- Roof, metallic
- Steering, secondary
- Sun visor, rear
- Windows, rubber mounted
- Windows, with front guard
- Windows, with heavy duty front guard
- Windows, with full guards front, rear and sides

ELECTRICAL AND LIGHTING

- Four additional auxiliary halogen cab mounted work lights or
- Two additional auxiliary front HI LED and two additional auxiliary rear LED cab mounted work lights with two LED work lights in the radiator grill and LED front turn signals also includes replacement of the standard four halogen cab mounted work lights with four LED work lights (the standard offering and only roading light available is the halogen roading light)
- Warning amber strobe beacon
- Reversing strobes
- External seat belt indicator light
- Speed limiter – 20 km/h (Europe only)

STARTERS, BATTERIES, AND ALTERNATORS

- Batteries (4), maintenance free 1,400 CCA with 120V engine coolant heater
- Batteries (4), maintenance free 1,400 CCA with 240V engine coolant heater

CAT CONNECT TECHNOLOGIES

- Cat Object Detection
- Payload technologies:
  - Aggregate Autodig
  - Cat Production Measurement
  - Printer, Cat Production Measurement
- Detect technologies: dedicated display for rear vision camera, full-time activation
- Machine Security System

POWER TRAIN

- Axles
  - Limited slip differentials, front and/or rear
  - Axle oil cooler
  - Extreme temperature seals
- Heavy duty transmission (980 only)
- Fan, VPF (variable pitch fan), automatic and manual control
- Radiator, high debris with wider fin spacing

LINKAGE

- High lift (980 only)
- Logger (980 only)
- Quick coupler ready

WORK TOOLS

- Performance Series buckets
- Forks, pallet
- Forks, logging

HYDRAULICS

- 3rd function with Ride Control
  - Standard linkage
  - High lift linkage
  - Logger linkage

FLUIDS

- Premixed extended life coolant with freeze protection to –50° C (–58° F)

OTHER OPTIONAL EQUIPMENT

- Wheel chocks
- Fenders, roading
- Guard, power train
- Oil change, high speed engine
- Fuel tank, fast fill
- Precleaner, turbine
- Precleaner, trash

OTHER OPTIONAL CONFIGURATIONS

- Aggregate Handler
- Industrial and Waste Handler (980 only)
- Logger (980 only)
- Steel Mill (980 only)

For more complete information on Cat products, dealer services, and industry solutions, visit us on the web at **www.cat.com**

AEHQ7244-01 (05-2016)
Replaces AEHQ7244
(NACD, Puerto Rico)

© 2016 Caterpillar
All rights reserved

Materials and specifications are subject to change without notice. Featured machines in photos may include additional equipment. See your Cat dealer for available options.

CAT, CATERPILLAR, SAFETY.CAT.COM, their respective logos, “Caterpillar Yellow” and the “Power Edge” trade dress, as well as corporate and product identity used herein, are trademarks of Caterpillar and may not be used without permission.

VisionLink is a trademark of Trimble Navigation Limited, registered in the United States and in other countries.