R1300G

Underground Mining Loader

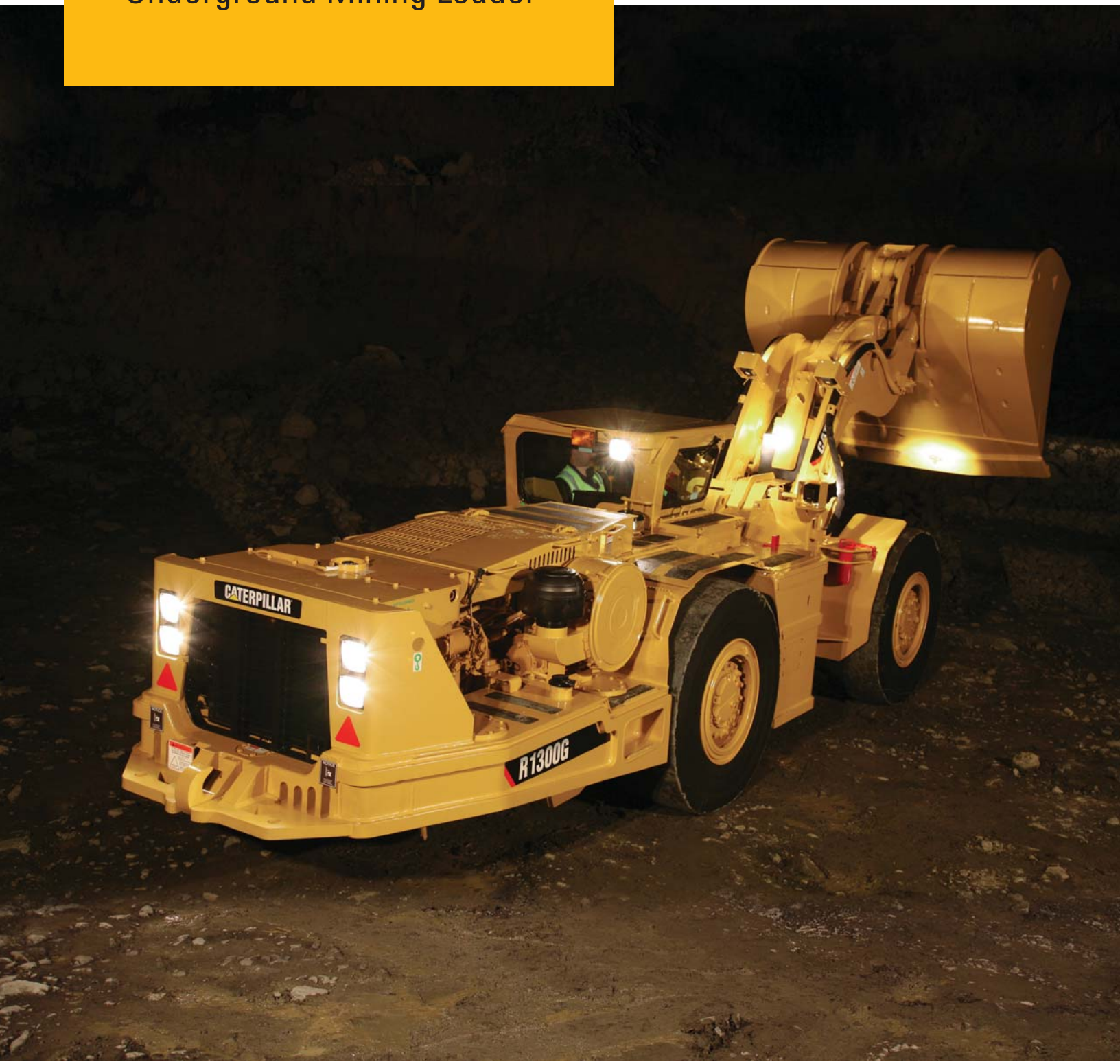

Engine			
Engine Model		Cat® 3306B DITA	
Gross Power –	SAE J1995	123 kW	165 hp
Net Power –	SAE J1349	105 kW	141 hp

Operating Specifications		
Nominal Payload Capacity	6800 kg	14,991 lb
Gross Machine Operating Weight	27 750 kg	61,178 lb
Bucket Capacities		
Bucket Capacities	2.4-3.4 m^3	3.1-4.4 yd^3

R1300G Features

One Supplier
Caterpillar designed and manufactured major power and drive train components for reliability and performance.

Reliable and Durable Engine
The Cat® 3306B engine offers the perfect balance between power, robust design and economy.

Power Shift Transmission
Reliable and rugged design to deliver power and efficiency for peak power train performance.

Hydraulics
Perfect balance between low effort controls and powerful forces for smooth and fast cycle time.

Durable Structures
The heavy duty frame is designed and built to absorb twisting, impact and high loading forces for maximum durability and reliability.

Comfortable Cab
Ergonomically designed for all-day comfort, control and productivity.

Aggressive Bucket Design
Engineered for optimal loadability and life in tough mining application. Various sizes and configurations available to match material and mine conditions.

Enhanced Serviceability
Designed with improved service points and grouped service locations to simplify maintenance and repair.

Built in Safety
Safety is not an after thought, but an integral part of all machine and system design.

Contents

Power Train – Engine 3
Power Train – Transmission 4
Hydraulics 5
Structures.....6
Operator Comfort 7
Loader Bucket Systems 8
Serviceability 9
Customer Support 10
Safety 11
R1300G Underground Mining Loader Specifications.....12
R1300G Standard Equipment.....15
R1300G Optional Equipment 15



The R1300G underground loader is designed for high production, low cost-per-ton loading and tramming in underground mining applications. Compact design with agile performance, rugged construction and simplified maintenance ensures excellent productivity, long life and low operating costs.

Engineered for performance, designed for comfort, built to last.

Power Train – Engine

The Cat® 3306B engine is built for power, reliability and efficiency.

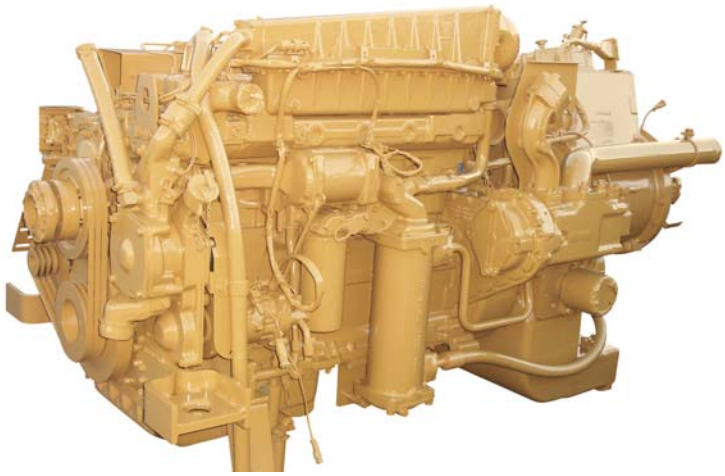

Engine

The Cat® 3306B is a proven engine that delivers reliability and durability. The efficient and powerful engine delivers maximum loading and tramming performance in the most demanding mining applications. Complete system integration of the engine and transmission ensures fuel efficiency and smooth operation.

High Torque Rise

Provides unequalled lugging force while digging, tramming and traversing steep grades. Torque rise effectively matches transmission shift points for maximum efficiency and fast cycle times.

Radiator

Modular radiator with swing-out grill provides easy access for cleaning or repair. Built in sight gauge allows for quick, safe coolant level checks.

Pistons

Oil cooled pistons increase heat dissipation and promote longer piston life.

Full-length Water-cooler

Full-length water-cooled cylinder liners provide maximum heat transfer.

Turbocharged and Aftercooled

Jacket water aftercooling provides improved fuel economy by packing cooler, denser air into cylinders for more complete combustion of fuel and lower emissions. The turbocharger enhances performance and efficiency.

Fuel Injection

The high pressure direct injection fuel system provides excellent fuel atomization for unmatched reliability and durability.

Crankshaft

The crankshaft is forged and induction hardened for long-term durability.

Power Train – Transmission

More power to the ground for greater productivity.



Power Shift Transmission

The Cat four-speed planetary power shift transmission is matched with the Cat 3306B diesel engine to deliver constant power over a wide range of operating speeds.

Robust Design

Designed for rugged underground mining conditions, the proven planetary power shift transmission is built for long life between overhauls.

Torque Converter

High capacity torque converter delivers more power to the wheels for superior power train efficiency.

Electronic Autoshift Transmission

The electronic auto shift transmission increases operator efficiencies and optimizes machine performance. The operator can choose between manual or auto shift modes.

Transmission Neutralizer

Using the left brake pedal, the operator can engage the service brakes and neutralize the transmission, maintaining high engine rpm for full hydraulic flow, enhancing digging and loading functions.

Final Drives

Cat final drives work as a system with the planetary power shift transmission to deliver maximum power to the ground. Built to withstand the forces of high torque and impact loads, double reduction final drives provide high torque multiplication to further reduce drive train stress.

Axles

Heavy duty axles are built rugged for long-life in the most demanding environments.

Oscillating Rear Axle

Oscillating rear axle ensures four-wheel ground contact for maximum traction and stability at all times.

Differential

No spin rear differential reduces tire wear and maximizes traction in uneven terrain.

Brakes

Fully enclosed oil immersed disc brakes incorporate independent service and parking brake pistons. Hydraulic actuated independent circuits provide improved performance and reliability.



Hydraulics

Cat hydraulics deliver the power and control to keep material moving.

Hydraulic System

Powerful Cat hydraulics deliver exceptional digging and lifting forces and fast cycle times.

Lift and Tilt System

High hydraulic flow rates provide fast hydraulic cylinder response and powerful lift forces. Large-bore tilt and lift cylinders deliver exceptional strength, performance and durability.

Pilot Controls

Low effort, pilot operated joystick implement control with simultaneous lift and tilt functions optimizes operating efficiency. Optional circuit controls enable ejector bucket to be controlled from a switch on the joystick.

Steering System

STIC™ control system integrates steering and transmission functions into a single controller for maximum responsiveness and smooth control.

Optional Ride Control

The optional ride control system uses a nitrogen filled oil accumulator in the hydraulic lift circuit to act as a shock absorber for the bucket and lift arms. The lift arm and bucket response to movement is dampened over rough ground, reducing fore and aft pitch, improving cycle times and load retention. A smoother, more comfortable ride gives operators the confidence to travel at speeds above 5 km/h (3 mph) during load and carry operations.

Cat Hydraulic Hose

Field proven Cat high pressure XT™ hydraulic hoses are exceptionally strong and flexible for maximum system reliability and long life in the most demanding conditions. Reusable couplings with O-ring face seals provide superior, leak free performance and prolong hose assembly life.

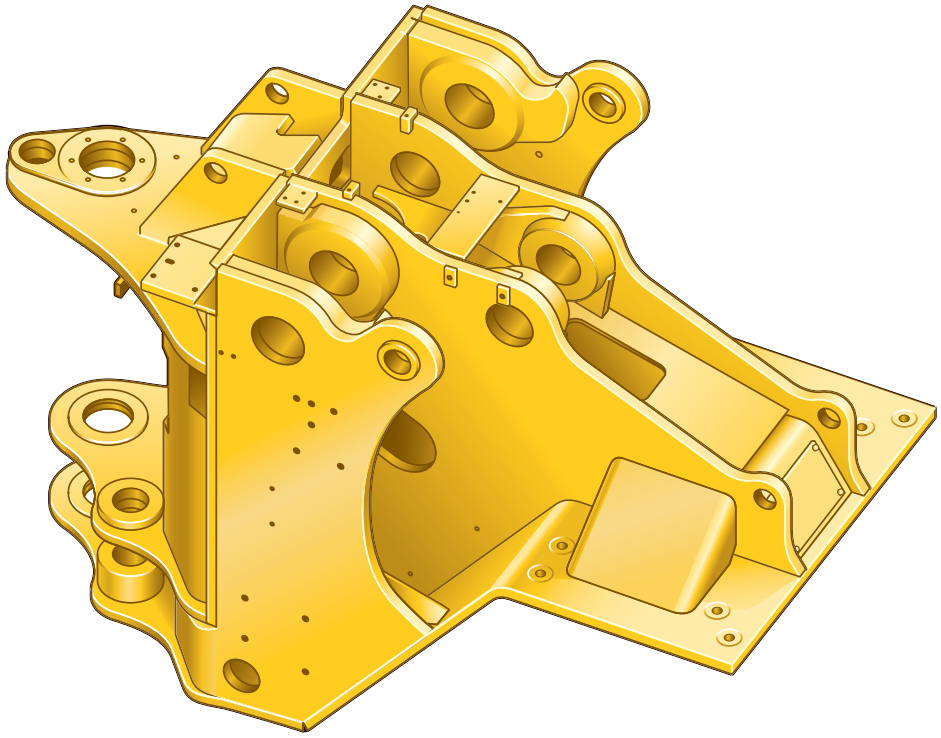

Structures

Rugged Cat structures – the backbone of the R1300G's durability.

Frame Design

The frame is engineered to withstand extreme forces generated during loading and tramming cycles. Precision manufacturing process ensures every structures are consistently built to high quality. Deep penetration and consistent welds throughout the frame ensures structures are solidly fused to provide sturdy platform for the linkage and the axles. The bores and the surfaces are precisely machined for perfect alignments for the pins and precision mating surfaces for major components resulting in durable frames that allow complete machine rebuild for 2nd or 3rd life.

Z-Bar Loader Linkage

Proven Z-Bar loader linkage geometry generates powerful breakout force and an increased rack back angle for better bucket loading and material retention. Heavy duty steel lift arms with cast steel cross tube ensures extreme loads encountered during loading and tramming are efficiently dissipated for long service life.

Sealed Pins

Sealed colleted pins are fitted to all bucket and lift arm hinge points for longer pin and bushing life. This reduces maintenance costs and extends service intervals. The sealed joints retain lubrication and prevent contaminant entry.

Hitch

Spread hitch design widens the distance between upper and lower hitch plates to distribute forces and increase bearing life. Thicker hitch plates reduce deflection. The wide opening provides easy service access. Upper and lower hitch pins pivot on roller bearings to distribute horizontal and vertical loads over a greater surface area. Shim adjusted preload reduces maintenance time. An on-board steering frame lock pin is fitted to prevent articulation during maintenance and service.

Operator Comfort

Ergonomically designed for all-day comfort, control and productivity.

The operator station is ergonomically designed for total machine control in a comfortable, productive and safe environment. All controls, levers, switches and gauges are positioned to maximize productivity and minimize operator fatigue.

Protective Structure

Integral to the cab and frame, the Rollover Protective Structure (ROPS) and the Falling Objects Protective Structure (FOPS), are resiliently mounted to the frame to isolate the operator from vibration for a more comfortable ride.

Optional Enclosed Cab

Optional sound-suppressed ROPS cab provides a quiet, secure working environment. Large window openings offer excellent visibility in all directions. Enclosed design provides fresh, pressurized, temperature-controlled air circulation with air condition for a more comfortable working environment.

STIC™ Steering and Transmission Integrated Control

STIC™ provides effortless control of the complete mobility of the machine by single controller. Simple side-to-side motion articulates the machine. Directional shifting (forward/neutral/reverse) is controlled using a three position rocker switch. The thumb operated buttons control gear selection.

Dual-Pedal Braking

Dual brake pedals function as a brake and a transmission neutralizer so the operator can maintain high engine rpm for full hydraulic flow and fast cycle times.

Monitoring System

Cat® Electronic Monitoring System (Cat EMS) continuously provides critical machine data to keep the machine performing at top production levels.

- **Message Center.** Three-category warning system alerts operator of abnormal machine health conditions.
- **Gauge Cluster.** Maintains a constant display of vital machine functions.
- **Speedometer/Tachometer Module.** Monitors three systems: engine speed, ground speed and gear indicator.

Pilot Controls

Low-effort pilot operated joystick controls integrate steering, transmission and implement functions for smoother, faster cycles with less operator fatigue.

Suspension Seat

Ergonomic, fully adjustable suspension seat provides optimal operator comfort. Thick cushions reduce pressure on lower back and thighs. Wide, retractable seat belts provide a secure, comfortable restraint.









Loader Bucket Systems

Rugged performance and reliability in tough underground mining applications.







Buckets

Aggressive Cat bucket designs deliver unmatched productivity in the most demanding applications. Underground mining buckets are designed for optimal loadability and structural reliability to help lower your cost-per-ton.

Bucket Selection

Cat underground loader buckets are available in two styles to meet a range of loading, hauling and dumping conditions.

- Dump buckets
- Ejector buckets

Bucket Capacities

Buckets are available in a range of sizes and capacities to suit most material types and densities.

Optional Wear Packages

Weld-on wear plates in high wear areas are standard. Additional wear packages, including sacrificial wear strips and Cat heel shrouds protect the edges from damage and reduce the need for costly bucket rebuilds.

Optional Cutting Edges

Cat half arrow, cast half arrow and weld on GET cutting edges extend bucket life in high wear applications.



Serviceability

More time for production.

Service Access
Easy access to daily service points simplifies servicing and reduces time spent on regular maintenance procedures.

Ground-Level Access
Allows convenient servicing to all tanks, filters, lubrication points and compartment drains.

Air Filters
Radial seal air filters are easy to change, reducing time required for air filter maintenance.

Sight Gauges
Fluid level checks are made easier with sight gauges.

Diagnostics
Cat Electronic Technician (Cat ET) service tool enables quick electronic diagnosis of machine performance and key diagnostic data for effective maintenance and repairs.

Sealed Electrical Connectors
Electrical connectors are sealed to lock out dust and moisture. Harnesses are covered for protection. Wires are color and number coded for easy diagnosis and repair.

Scheduled Oil Sampling
S·O·S℠ helps avoid minor repairs becoming major ones.

Customer Support

Cat® dealer services keep underground mining equipment productive.



Cat dealers offer solutions, services and products that help lower costs, enhance productivity and manage your operation efficiently. From the selection of Cat equipment until the day you rebuild, trade or sell it, the support you get from your Cat dealer makes the difference that counts.

Dealer Capability

Cat dealers will provide the level of support you need, on a global scale. Dealer expert technicians have the knowledge, experience, training and tooling to handle your repair and maintenance needs, when and where you need them.

Product Support

When Cat products reach the field, they are supported 24/7 by a worldwide network of reliable and prompt parts distribution facilities, dealer service centers, and technical training facilities to keep your equipment up and running.

Service Support

Cat equipment is designed and built to provide maximum productivity and operating economy throughout its working life. Cat dealers offer a wide range of service plans that will maximize return on your investment, including:

- Preventive Maintenance Programs
- Diagnostic Programs, such as Scheduled Oil Sampling and Technical Analysis
- Rebuild and Reman Options
- Customer Support Agreements

Technology Products

Cat dealers offer a range of advanced technology products designed to improve efficiency, productivity and lower costs.

Operator Training

Today's complex products require operators have a thorough understanding of machine systems and operating techniques to maximize efficiency and profitability. Your Cat dealer can arrange training to improve productivity, decrease downtime, reduce operating costs, enhance safety, and improve your return on investment.

Application Awareness

Application and site-specific factors, such as: material density, loading position, grades, speeds, and haul road design influence operating and maintenance costs. Your Cat dealer can provide you with the understanding to optimize productivity and the total cost of ownership.

www.cat.com

For more complete information on Cat products, dealer services, and industry solutions, visit us on the web at www.cat.com.



Safety

Designed with safety as the first priority.

Product Safety

Caterpillar has been and continues to be proactive in developing mining machines that meet or exceed safety standards. Safety is an integral part of all machine and systems designs.

Engine Shut Off Switch

A secondary engine shutoff switch is located at ground level.

Integral ROPS Cab

Integral to the cab and frame, the ROPS is resiliently mounted to the frame to isolate the operator from vibration for a more comfortable ride.

Brake Systems

Four corner oil-cooled braking system provides excellent control. The service brake system is actuated by modulated hydraulic pressure, while the parking brake function is spring applied and hydraulic released. This system assures braking in the event of loss of hydraulic pressure.

Standard Safety Features

Anti-skid upper deck surfaces, ground level compartment sight gauges, increased visibility, 3-point access to cab and machine, push out safety glass, suspension seat, inertia reel retractable seat belt, lift arm support pins, hot and cold side of engine, steering frame lock, hinged belly guards.

SAFETY.CAT.COM™

For more complete information on safety, please visit http://safety.cat.com.

R1300G Underground Mining Loader Specifications

Engine

Engine Model	Cat® 3306B DITA	
Rated Power	2,200 rpm	
Gross Power – SAE J1995	123 kW	165 hp
Net Power – SAE J1349	105 kW	141 hp
Net Power – ISO 9249	105 kW	141 hp
Net Power – 80/1269/EEC	105 kW	141 hp
Bore	120.7 mm	4.75 in
Stroke	152.4 mm	6 in
Displacement	10.5 L	640.75 in^3

- Power ratings apply at a rated speed of 2,200 rpm when tested under the reference conditions for the specified standard.
- Ratings based on SAE J1995 standard air conditions of 25° C (77° F) and 100 kPa (29.61 Hg) barometer. Power based on fuel having API gravity of 35 at 16° C (60° F) and an LHV of 42 780 kJ/kg (18,390 BTU/lb) when engine used at 30° C (86° F).
- Engine derate will commence at an altitude of 4500 m (14,763.7 ft).

Operating Specifications

Nominal Payload Capacity	6800 kg	14,991 lb
Gross Machine Operating Weight	27 750 kg	61,178 lb
Static Tipping Load Straight Ahead Lift Arms Horizontal	20 575 kg	45,360 lb
Static Tipping Load Full Turn Lift Arms Horizontal	17 870 kg	39,397 lb
Breakout Force (SAE)	12 020 kg	26,504 lb

Weights

Empty	20 950 kg	46,187 lb
Front Axle	8150 kg	17,967 lb
Rear Axle	12 800 kg	28,220 lb
Loaded	27 750 kg	61,178 lb
Front Axle	18 620 kg	41,050 lb
Rear Axle	9130 kg	20,128 lb

Transmission

Forward 1	5 km/h	3.1 mph
Forward 2	9 km/h	5.6 mph
Forward 3	17 km/h	10.6 mph
Forward 4	24 km/h	14.9 mph
Reverse 1	5 km/h	3.1 mph
Reverse 2	8 km/h	5 mph
Reverse 3	15 km/h	9.3 mph
Reverse 4	23 km/h	14.3 mph

Hydraulic Cycle Time

Raise	5 Seconds
Dump	2 Seconds
Lower, empty, float down	2.3 Seconds
Total Cycle Time	9.3 Seconds

Bucket Capacities

Dump Bucket – 1	3.1 m^3	4.1 yd^3
Dump Bucket – 2	2.4 m^3	3.1 yd^3
Dump Bucket – 3	2.8 m^3	3.7 yd^3
Dump Bucket – 4	3.4 m^3	4.4 yd^3
Ejector Bucket	2.4 m^3	3.1 yd^3

Turning Dimensions

Outside Clearance Radius	5741 mm	226 in
Inner Clearance Radius	2914 mm	114.7 in
Axle Oscillation	10°	
Articulation Angle	42.5°	

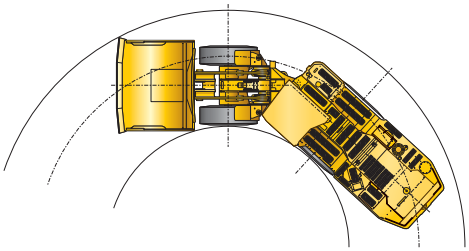

Tires

Tire Size	17.5 × 25 20 PLY L5S STMS

Service Refill Capacities

Engine Crankcase with Filter	25 L	6.6 gal
Transmission	45 L	11.9 gal
Hydraulic Tank	88 L	23.2 gal
Cooling System	67 L	17.7 gal
Front Differential and Final Drives	38 L	10 gal
Rear Differential and Final Drives	42 L	11.1 gal
Fuel Tank	295 L	77.9 gal

Standards

Brakes	ISO 3450, AS2958.1, CAN-CSA424.30-M90
Cab/FOPS	ISO 3449, SAE J231, AS2294.3, EN13627
Cab/ROPS	ISO 3471, SAE J1040, AS2294.2, EN13510

Dimensions

All dimensions are approximate.

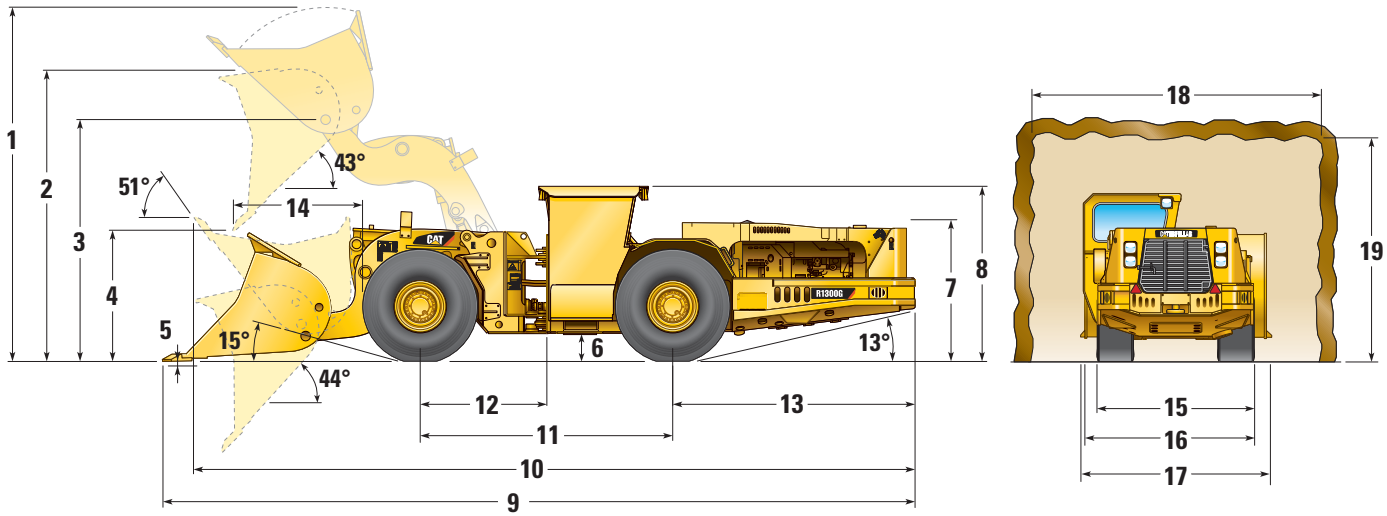

	243-5577 Dump Bucket		186-9278 Dump Bucket		243-6143 Dump Bucket		243-6224 Dump Bucket		157-3622 Ejector Bucket	
Bucket Capacity	2.4 m^3	3.1 yd^3	2.8 m^3	3.7 yd^3	3.1 m^3	4.1 yd^3	3.4 m^3	4.4 yd^3	2.4 m^3	3.1 yd^3
	mm	in	mm	in	mm	in	mm	in	mm	in
Bucket Width over Cutting Edge	1950	76.8	2010	79.1	2200	86.6	2400	94.5	2200	86.6
1 Height – Bucket Raised	4234	166.7	4302	169.4	4302	169.4	4302	169.4	4302	169.4
2 Height – Max Dump	3550	139.8	3531	139.0	3531	139.0	3531	139.0	3579	140.9
3 Height – Max Lift Bucket Pin	2918	114.9	2918	114.9	2918	114.9	2918	114.9	2918	114.9
4 Height – Dump Clearance at Max Lift	1664	65.5	1560	61.4	1560	61.4	1563	61.5	1563	61.5
5 Height – Digging Depth	26	1.0	36	1.4	34	1.3	36	1.4	36	1.4
6 Height – Ground Clearance	328	12.9	328	12.9	328	12.9	328	12.9	328	12.9
7 Height – Top of Hood	1628	64.1	1628	64.1	1628	64.1	1628	64.1	1628	64.1
8 Height – Top of ROPS	2120	83.5	2120	83.5	2120	83.5	2120	83.5	2120	83.5
9 Length – Overall (Digging)	8943	352.1	9100	358.3	9107	358.5	9095	358.1	9095	358.1
10 Length – Overall (Tramming)	8613	339.1	9707	382.2	8714	343.1	8704	342.7	8704	342.7
11 Length – Wheelbase	3050	120.1	3050	120.1	3050	120.1	3050	120.1	3050	120.1
12 Length – Front Axle to Hitch	1525	60.0	1525	60.0	1525	60.0	1525	60.0	1525	60.0
13 Length – Rear Axle to Bumper	2932	115.4	2932	115.4	2932	115.4	2932	115.4	2932	115.4
14 Length – Reach	1476	58.1	1588	62.5	1583	62.3	1584	62.4	1584	62.4
15 Width – Overall Tire	1900	74.8	1900	74.8	1900	74.8	1900	74.8	1900	74.8
16 Width – Machine with Bucket	2155	84.8	2185	86.0	2381	93.7	2518	99.1	2318	91.3
17 Width – Machine without Bucket	2071	81.5	2071	81.5	2071	81.5	2071	81.5	2071	81.5
18 Recommended Clearance Width	3000	118.1	3000	118.1	3000	118.1	3000	118.1	3000	118.1
19 Recommended Clearance Height	2800	110.2	2800	110.2	2800	110.2	2800	110.2	2800	110.2

Gradeability/Speed/Rimpull

To determine gradeability performance: Read from gross weight down to the percent of total resistance. Total resistance equals actual percent grade plus rolling resistance. As a general guide use 2% for rolling resistance in underground application or refer to the Caterpillar Performance Handbook. From the total resistance point, read horizontally to the curve with the highest obtainable gear, then down to maximum speed. Usable rimpull will depend upon traction available and weight on drive wheels.

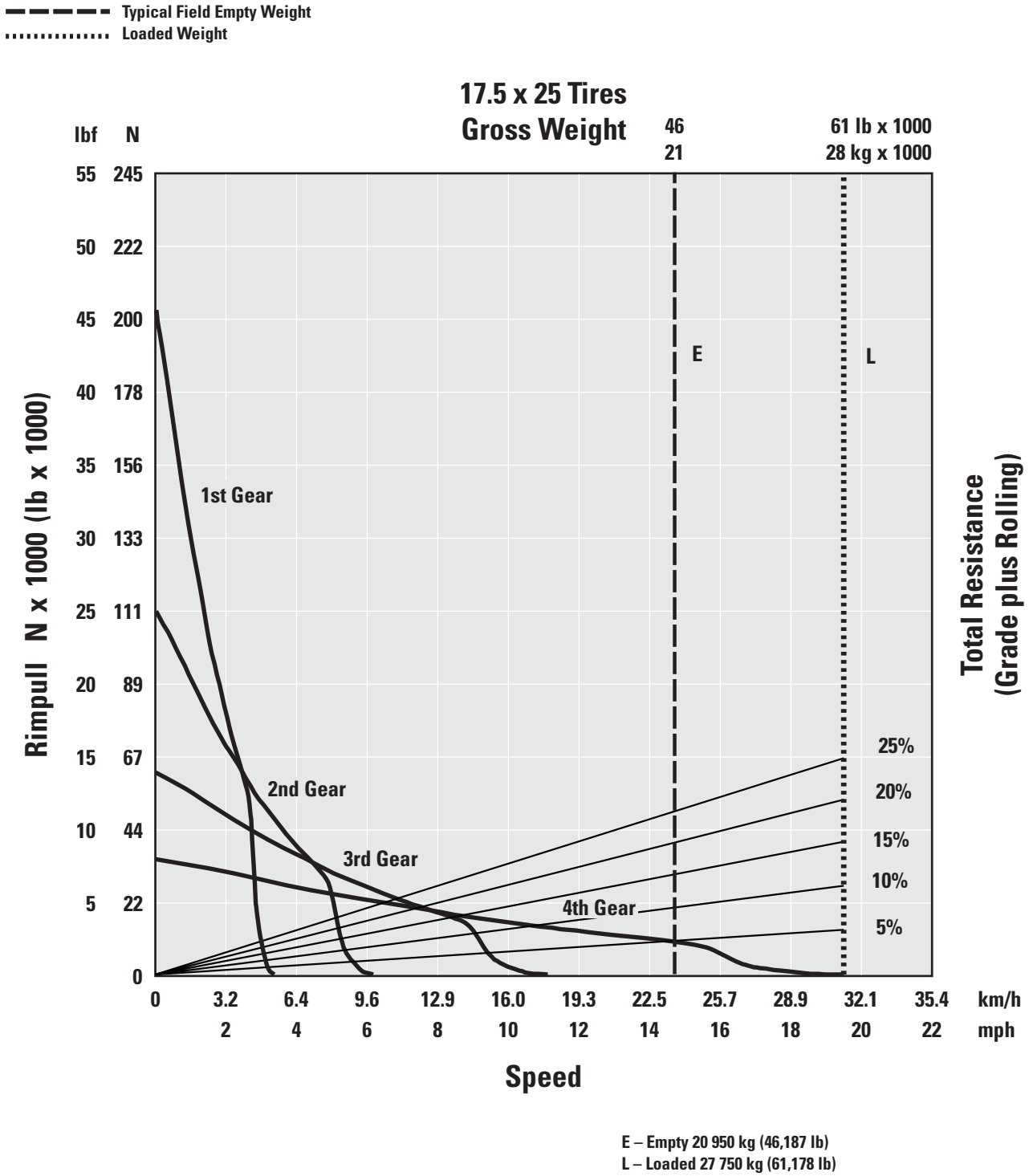

E – Empty 20 950 kg (46,187 lb)
L – Loaded 27 750 kg (61,178 lb)

R1300G Standard Equipment

Standard equipment may vary. Consult your Cat dealer for details.

ELECTRICAL
Alternator, 95-amp
Battery Disconnect Switch, Ground Level
Circuit Breaker, 80-amp
Corrosive Protection Spray
Diagnostic Connector
Electric Starting, 24-volt
Engine Shutdown Switch
External Lighting System, Front, Rear
Low Maintenance Batteries
Reversing Alarm
Starting and Charging System

OPERATOR ENVIRONMENT
Cat Electronic Monitoring System (Cat EMS)
Electric Horns
Gauges
- Engine Coolant Temperature
- Fuel Level
- Hydraulic Oil
- Speedometer
- Tachometer
- Transmission

Pilot Hydraulic Implement Controls, Single Joystick
Removable ROPS/FOPS Structure
STIC™ Steering
Suspension Tee Seat with Retractable Seat Belt

POWER TRAIN
Cat 3306B DITA Diesel Engine, 6-Cylinder
Crossflow Radiator
Engine Air Intake Precleaner
Fuel Priming Aid
Full Hydraulic Enclosed Wet Disc Brakes (SAFR™)
Heat Shields
Manual Fuel Shut Off Tap
Planetary Powershift Transmission
Torque Converter
Transmission Neutralizer

OTHER STANDARD EQUIPMENT
Catalytic Exhaust Purifier/Muffler Group
Engine and Transmission Belly Guards
Fenders, Front, Rear
Firewall
Hydraulic Oil Cooler, Swing Out
Rear Frame Protection Wear Bars 100 × 50 mm (4 × 2 in)
Rims, 5-Piece
Semi Centralized Lubrication Points
Swing Out Radiator Grill
Tires, VSMS 17.5 × 25 20-Ply (L5S)

R1300G Optional Equipment

Optional equipment may vary. Consult your Cat dealer for details.

5 Spare Piece Rim
Alternative Tire Arrangements
Automatic Lube System
Auxiliary Start Receptacle
Brake Light
Brake Pressure Gauges
Brake Release Arrangements
Bucket
- Bucket (2.4 m^3, 3.1 yd^3)
- Bucket (2.8 m^3, 3.7 yd^3)
- Bucket (3.4 m^3, 4.4 yd^3)
- Ejector Bucket (2.4 m^3, 3.1 yd^3)
- Bucket Heel Shrouds
- Bucket Sacrificial Wear Strip Package

Bucket Positioner, Return to Dig
Cab Protection Bars
Centralized Lube System, Manual
Draw Bar Attachment, Bolt-on
Duo Cone Seal Guards
Ejector Bucket Ready, Includes 3rd Valve with Pilot Lines Only
Electronic Access Module
Enclosed ROPS/FOPS Operator Station
Fast Fill System
- Coolant
- Engine
- Fuel
- Hydraulic
- Transmission

Fire Extinguisher
Fire Suppression System
Front Light Protectors
Heater, Cabin
Hydraulic Tank Guard Protection Bars
Oil Sample Adapters
Payload Control System (PCS)
Radiator Guard Protection Bars
Radiator Sand Blast Guards, Not Available with Air Con Cab
Remote Activated Fire System
Remote Control Systems
- Proportional
- Retrieval Attachment

Reversible Steering
Ride Control System
Seat Covers
Secondary Steering System
Service Tools

R1300G Underground Mining Loader

DEALER

McDowell Since 1968

2018 Kingsway Blvd.
Sudbury, Ontario, Canada P3B 4J8
Tel: +1 (705) 566-8190
www.bmcdowell.com
sales@bmcdowell.com

For more complete information on Cat products, dealer services, and industry solutions, visit us on the web at **www.cat.com**

© 2011 Caterpillar Inc.
All rights reserved

AEHQ6356 (07-2011)
Replaces AEHQ5919

Materials and specifications are subject to change without notice. Featured machines in photos may include additional equipment. See your Cat dealer for available options.

CAT, CATERPILLAR, SAFETY.CAT.COM, their respective logos, “Caterpillar Yellow” and the “Power Edge” trade dress, as well as corporate and product identity used herein, are trademarks of Caterpillar and may not be used without permission.

CAT®