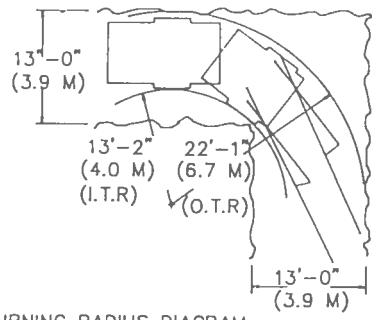

TURNING RADIUS DIAGRAM

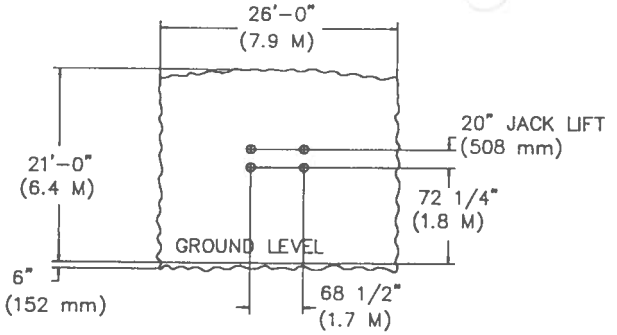

FACE COVERAGE DIAGRAM

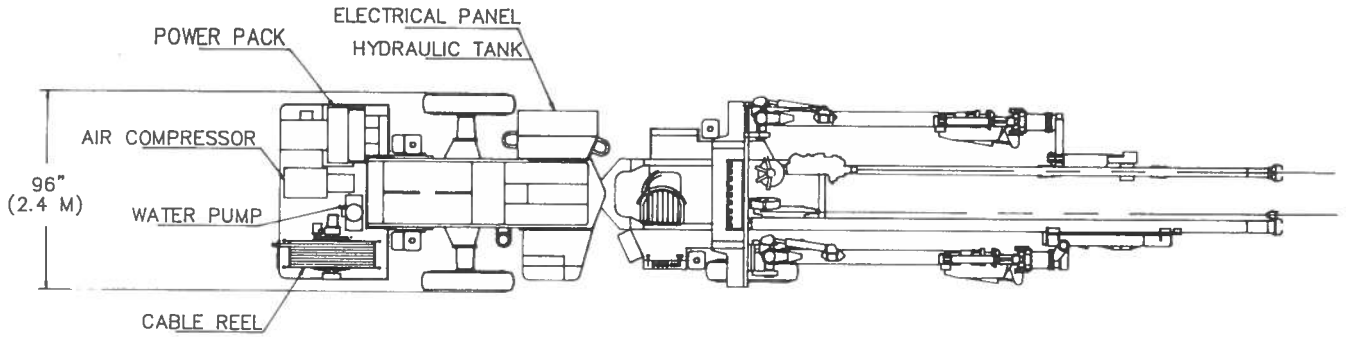

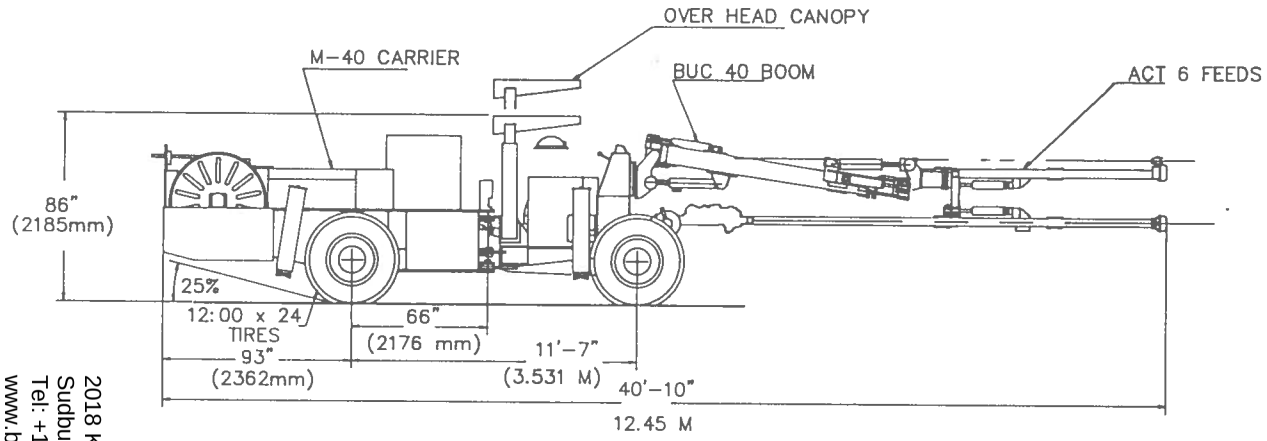

NOTE: DIMENSIONS MAY VARY
UPON DESIGN COMPLETION.

CJ-240 PROPOSAL C/W
DUAL OPERATING STATION

119989-E

DEALER

McDowell

2018 Kingsway Blvd.
Sudbury, Ontario, Canada P3B 4J8
Tel: +1 (705) 566-8190
www.bmcdowell.com
sales@bmcdowell.com