Normet Oy
Ahmolantie 6
FI-74510 IISALMI, FINLAND
Tel +358 (0) 17 83 241
Fax +358 (0) 17 823 606
info@normet.fi www.normet.fi

Spraymec 7110 WPC

Concrete sprayer

TI 1700497
DATE 03.07.2012

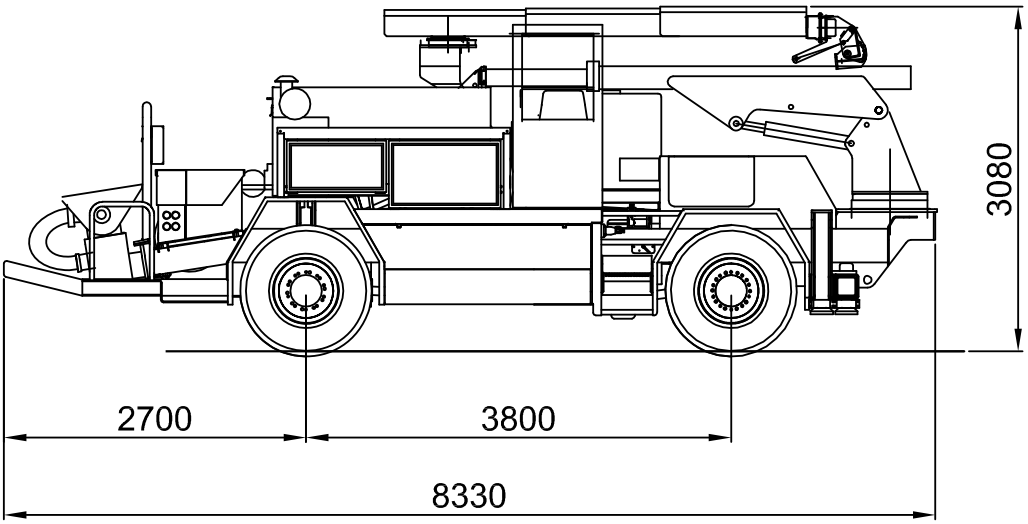

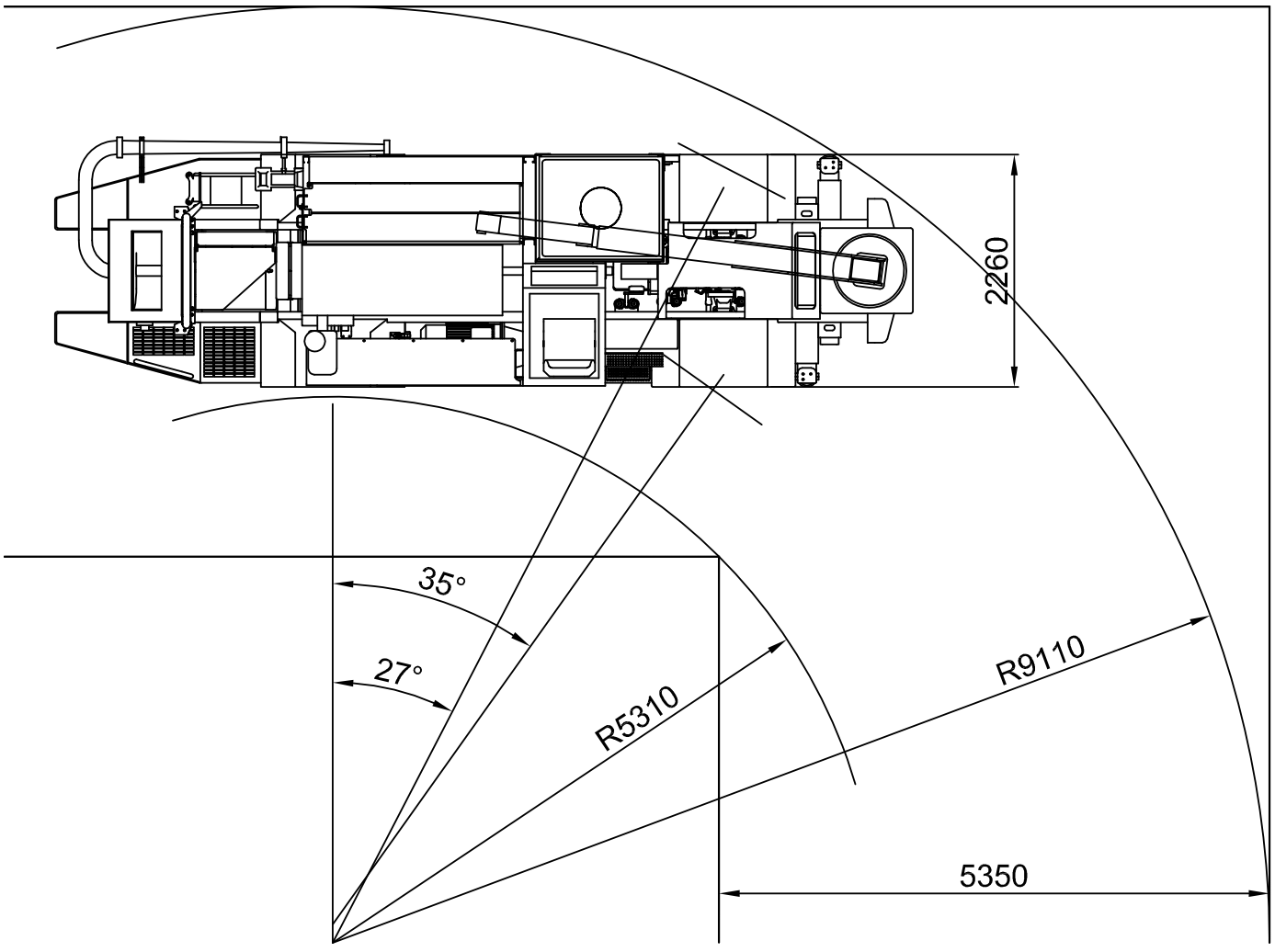

Normet Oy
Ahmolantie 6
FI-74510 IISALMI, FINLAND
Tel +358 (0) 17 83 241
Fax +358 (0) 17 823 606
info@normet.fi www.normet.fi

Spraymec 7110 WPC

Concrete sprayer

Max. reach

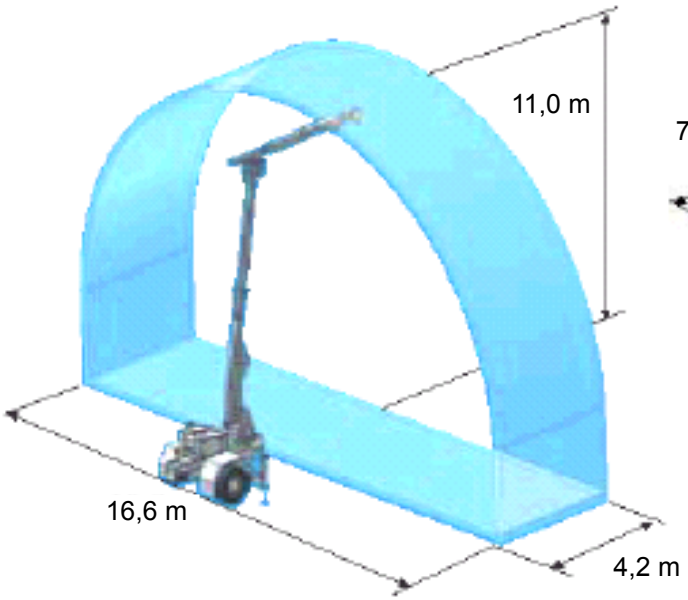

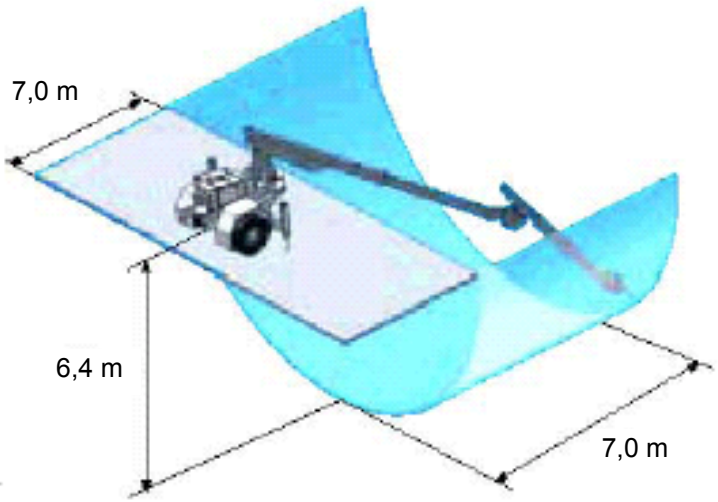

Min. section

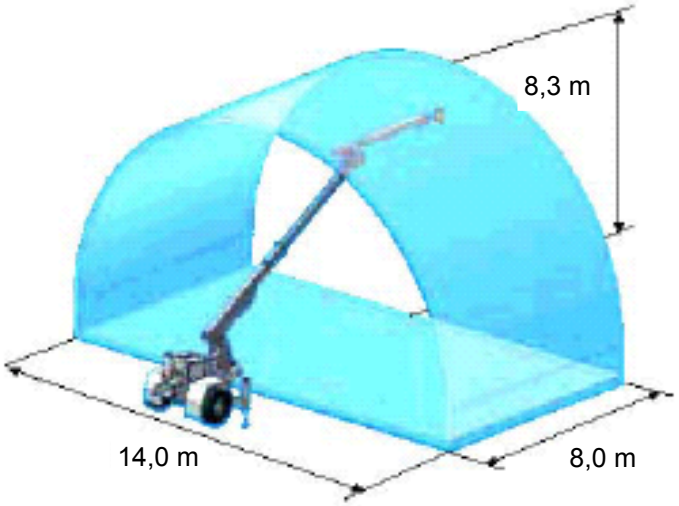

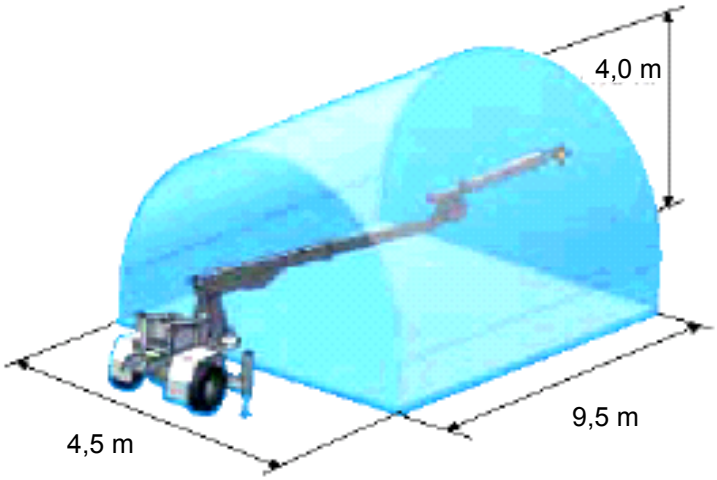

Normet Oy
Ahmolantie 6
FI-74510 IISALMI, FINLAND
Tel +358 (0) 17 83 241
Fax +358 (0) 17 823 606
info@normet.fi www.normet.fi

Spraymec 7110 WPC

Concrete sprayer

SPRAYMEC 7110 WPC
is a self propelled wheel steered unit for power spraying of concrete in underground caverns and tunnels.

DIMENSIONS

Length	8330 mm
Width	2260 mm
Height	3080 mm
Wheel base	3800 mm
Ground clearance	300 mm
Outer turning radius	9110 mm
Inner turning radius	5310 mm
Weight, max. total	16000 kg

1. SPRAYPUMP
is the low-wear and low-maintenance double piston pump with the output of 4-30 m^3/hour. Pumping cylinders with a diameter 200 mm, stroke 750 mm and the large suction openings ensure good suctioning, high pumping pressure enable the conveying of stiff concrete consistencies, with a low water/cement ratio max. aggregate size of 16 mm (also crushed) and all types of fibres in the mix.

SPRAYPUMP	
Cylinder diameter	200 mm
Cylinder stroke	750 mm
Pumping pressure	57 bar
Pumping capacity	4 - 30 m^3/h
Practical capacity	25 m^3/h

2. ACCELERATOR DOZING SYSTEM NORDOZER 900 H
is designed using wear and corrosion resistant components compatible with all types of liquid accelerators. The accelerator flow is adjustable by manual control, using digital flow meter, from 60 to 900 litres/h

1000 L space for container	
Dosing rate	60 - 900 L/h

3. ELECTRO-HYDRAULIC POWER PACK PPE 550
consist of pumps, oil receiver and filters operates the concrete pump and booms. Boom hydraulics can also be operated diesel-hydraulically.

PPE550	55 kW/400 V 50Hz

4. SPRAYBOOM SB 510
is of universal type and has the following automatic movements: nozzle rotation, telescopic stroke, vertical and horizontal paraller automatics. These automatic functions help the operator to concentrate on the quality of the spraying process and on minimizing the rebound.

Boom coverages	
- lateral	16 m
- vertical	11 m
Telescopic spraying boom	
- basic boom, stroke	3,0 m
- nozzle boom, stroke	2,2 m
Automatic functions:	
- nozzle rotation	
- telescopic stroke	
- horizontal parallel automatics	
- vertical parallel automatics	

5. SCREW COMPRESSOR

FAD	10 m^3 min at 7,0 bar
Electric motor	55 kW/400 V

6. CABLE REEL KKH70
for power supply of the electrically operated functions, including 100 m of cable.

Power cable
diam. 3 x 70 mm^2 + ground, L = 100 m

7. SUPPORT LEGS
1 pair in front, hydraulically operated, with lateral extensions.

8. WORKING LIGHTS

At boom end	4 x 70 W
	2 x 1000 W
On carrier	2 x 70 W
	1 x 500 W

9. SAFETY CANOPY
over the drivers seat fulfills the European safety regulations.

10. CARRIER NC 70
is specially designed for underground use. Diesel engine with hydro-dynamic transmission and 4-wheel drive gives max. speed of 18 km/h. Fully enclosed multidisc 2-circuit brakes and parking and emergency brake make operating reliable and safe in the harsh underground conditions.

Diesel engine	96 kW
Driving speed	max. 18 km/h

OPTIONAL EQUIPMENT:

690V/50 Hz electrics
1000V/50 Hz electrics
Particle filter
LED driving lights (4 + 2 pcs)
LED working lights on cabin (2 + 2 pcs)
Upgrade Nordozer 900 EH
4-Wheel steering
Concrete casting kit
Hydraulic driven water hose reel

ADDITIONAL EQUIPMENT:

Soft start system for compressor, 400 V / 50 Hz
Soft start system for compressor, 690 V / 50 Hz
Hydraulic driven high pressure washer 180 bar / 30 L
Rock wall washing system 460 bar / 50 L
Rock wall washing system 180 bar / 90 L
Electric driven (400V) high pressure washer
Fogmaker extinguishing system (manual)
Fogmaker extinguishing system (automatic)
Ansul extinguishing system (manual)
Ansul extinguishing system (automatic)
Tempus manually actuated (Non CE)
Lubrication system for carrier, boom and pump (Lincoln)
1 extra hand held fire extinguisher (12 kg)
Tools for maintenance
2 pcs wheel chocks with brackets
Spare wheel
Admixture warming kit 1500 W
Admixture container (plastic) 1000 L
Admixture mixing kit
Radio remote controlled boom
Radio control with 4 joystics
Cooling kit for concrete pump oil
Cooling kit for compressor oil
Iron wheels for container transport
Form oil system

LTC SERVICES:

SPARE PARTS

Spare parts package A: Available for 1000 h of use*. Include periodical service, most common wearing parts and most critical safety parts.
Spare parts package B: Available for 3000 h of use*. Include periodical service, most common wearing parts and most critical safety parts.
* Recommendations are based on average hours - can vary a lot depending on work site conditions.

TRAINING SERVICES

Available before delivery, at start up and after delivery

Product training:
Operation and Maintenance
NorSmart
Foundation of electrics, hydraulics and mechanics
Audit

Process training:
Concrete spraying
Charging
Process audit

AUDIT SERVICES

To improve performance of the machines
To improve the performance of your processes
To help improve the quality of maintenance operations

SERVICE CONTRACTS

Spare parts supply programmes
Scheduled inspection programmes
Supervision programmes
Periodic maintenance programmes
Machine usage programmes

LINK ONE

Link One electronic spare part manuals

WARRANTY SERVICES

Extended warranty

DEALER

McDowell Since 1968

2018 Kingsway Blvd.
Sudbury, Ontario,
Canada P3B 4J8
Tel: +1 (705) 566-8190
www.bmcdowell.com
sales@bmcdowell.com