McDOWELL BROTHERS INDUSTRIES INC.
2018 KINGSWAY BLVD.
SUDBURY, ONTARIO P3B 4J8
CANADA
(705) 566-8190

Carrier Styles

2.1 Skid-Steer

Our "standard" unit, the Skid-Steer carrier is a fully-mobile, self-propelled wheeled carrier suitable for most underground applications. Featuring two independent pneumatic motors driving four solid rubber tires, this style has impressive mobility in most conditions and does not require the presence of rails. Each unit comes equipped standard with two booms.

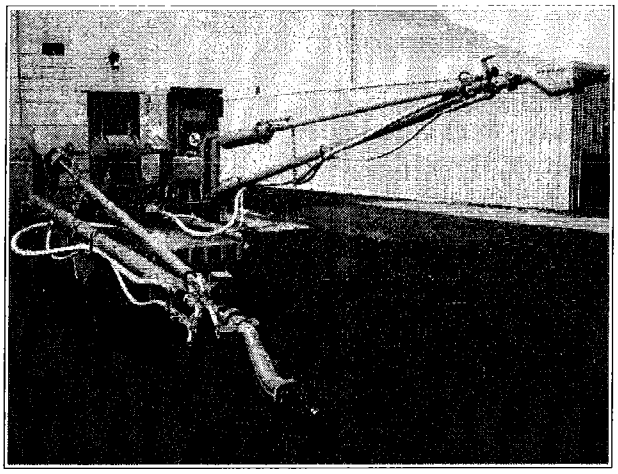

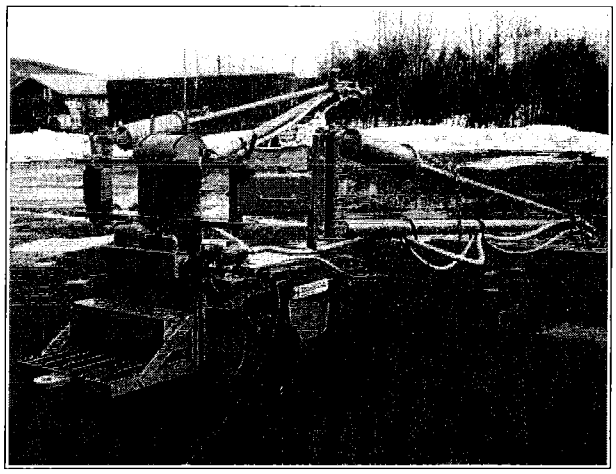

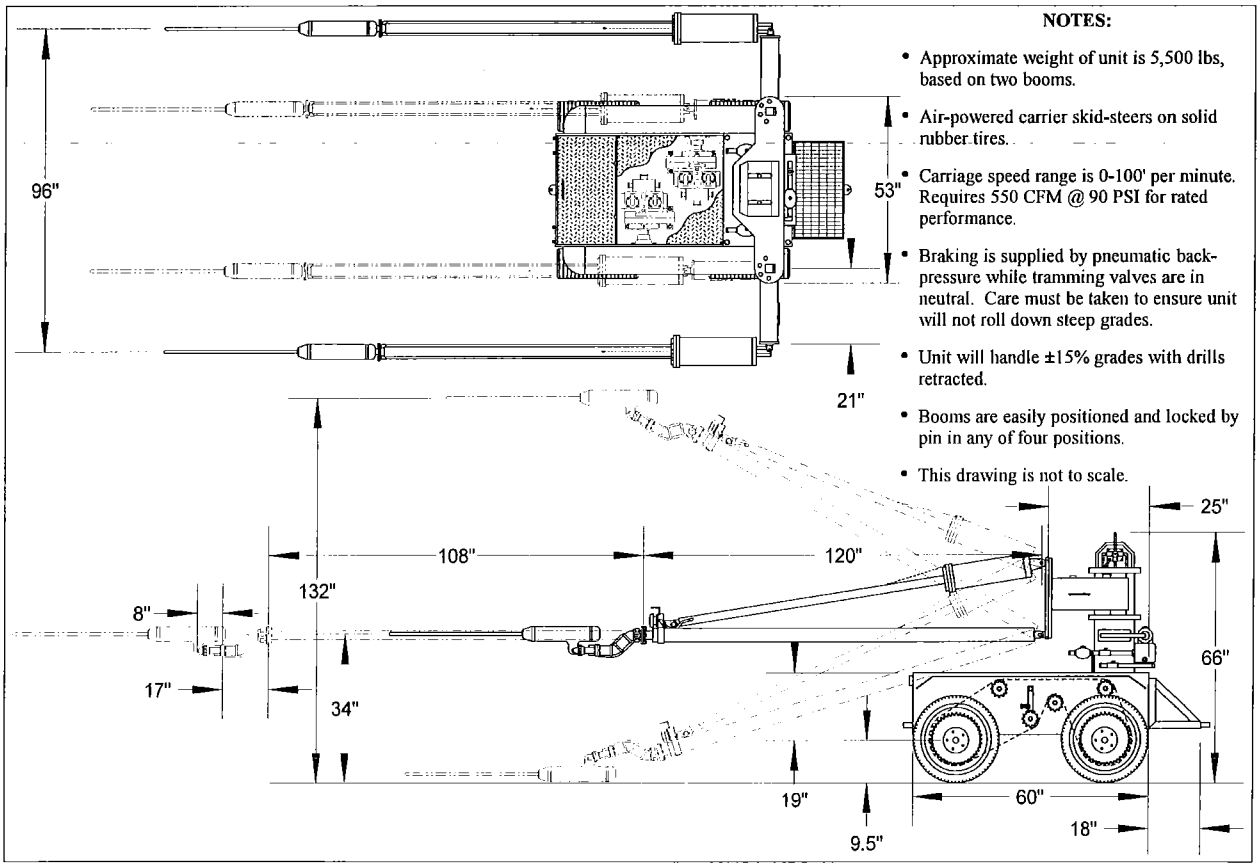

NOTES:

- Approximate weight of unit is 5,500 lbs, based on two booms.
- Air-powered carrier skid-steers on solid rubber tires.
- Carriage speed range is 0-100' per minute. Requires 550 CFM @ 90 PSI for rated performance.
- Braking is supplied by pneumatic back-pressure while tramming valves are in neutral. Care must be taken to ensure unit will not roll down steep grades.
- Unit will handle ±15% grades with drills retracted.
- Booms are easily positioned and locked by pin in any of four positions.
- This drawing is not to scale.