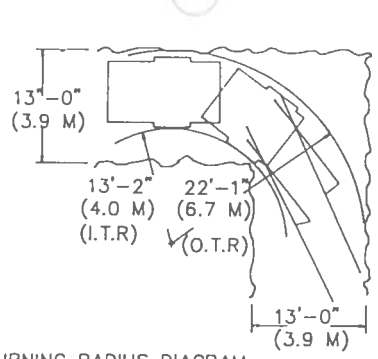

TURNING RADIUS DIAGRAM

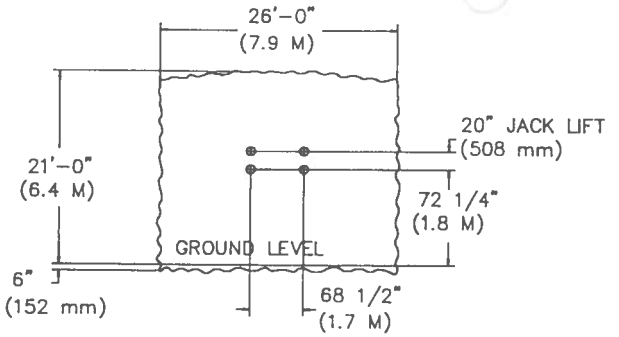

FACE COVERAGE DIAGRAM

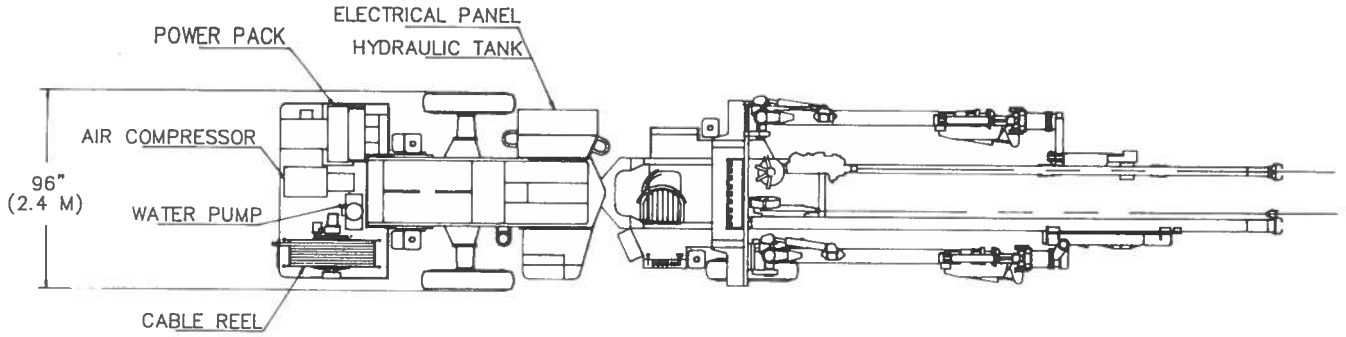

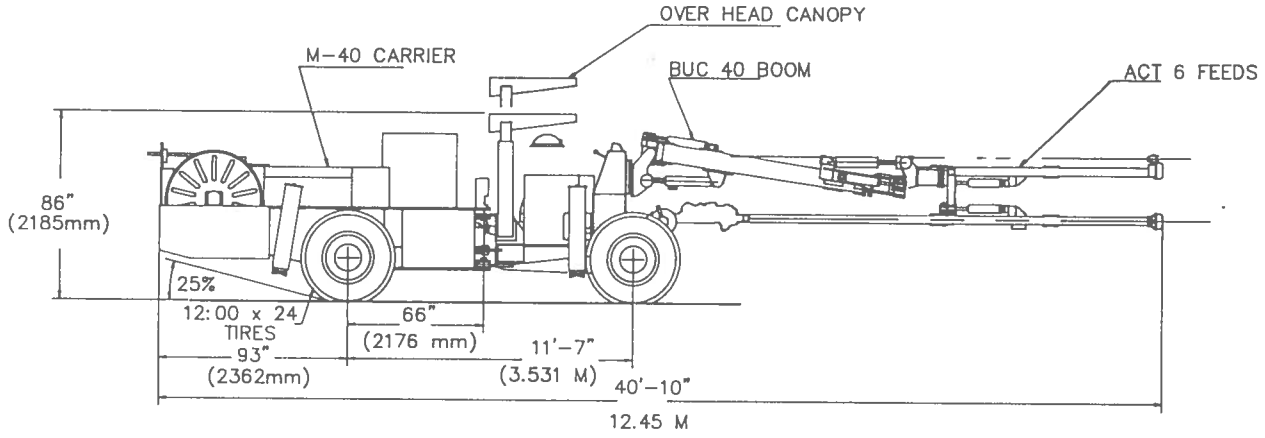

NOTE: DIMENSIONS MAY VARY
UPON DESIGN COMPLETION.

CJ-240 PROPOSAL C/W
DUAL OPERATING STATION

119989-E