Link-Belt
EXCAVATORS • FORESTRY
DEMOLITION • MATERIAL HANDLING

350X3 SPECIFICATIONS

SAE Net Horsepower: 266 HP (198 kW)
Operating Weight: 80,028 lbs. (36 300 kg)
Digging Depth: 24 ft 1 in (7.34 m)



McDowell Since 1968
2018 Kingsway Blvd.
Sudbury, Ontario, Canada P3B 4J8
Tel: +1 (705) 566-8190
www.bmcdowell.com
sales@bmcdowell.com

Cab

The Link-Belt X3 cab is the strongest and roomiest LBX has ever offered. The X3 cab is ROPS and FOPS Level 1 certified and is designed to be strong and safe without sacrificing operator comfort. There is plenty of room to rest work boots on the two foot rests on either side of the travel pedals and still have enough space for the straight line travel pedal (standard on 250X3 and larger).



Roomy
- 5% larger than X2 series cab
- 7% more floor space

Strong
- ROPS and FOPS Level 1 certified

Comfortable
- Fully-adjustable KAB seat, forward/backward, up/down
- Control consoles adjust independently of seat
- Adjustable arm rest angles, lumbar support, suspension

Optimum Visibility
- Sunroof with sunshade rated FOPS level 1
- Additional mirrors
- Standard rearview camera
- Wiper blade stores off front glass

Ergonomic Joysticks
- Low-effort
- Pre-wired for auxiliary hydraulics
- Function buttons for wiper swipe, horn, radio mute and one-touch idle
- Large, easy-to-push triggers

Quiet
- Pressurized cab
- 8% stronger climate control system with 8 vents
- Auxiliary sound jack to enjoy music or podcasts

Organized
- Logically located switches and controls
- Accessible 12V outlet for cell phone charging
- Cup holder
- Handy phone storage areas
- Removable ashtray; empty space can be used as an additional cup holder



High-Definition 7” LED Monitor

The Link-Belt X3’s from LBX are equipped with an all new High-Definition LED monitor. The full-color 7-inch monitor is one of the largest in the industry and rivals the resolution and quality found in luxury automobiles.

The X3’s user-friendly monitor panel includes an engine-idle shutdown option that safely shuts off the engine after 3 minutes of idling, conserving fuel. Another idle feature accessible from the monitor panel is the auto-idle feature that, when selected, takes the engine speed down to an idle level, conserving fuel while waiting for that next truck to show up.



The X3’s use a “passive” regeneration process and the monitor clearly lets the operator know what is going on and if they need to do anything with the machine. The on-screen DPD gauge shows the level of particulate matter that the DPF is capturing and will clean it out every 8 hours by way of an Auto Regeneration. During the Auto Regeneration process, the operator does NOT have to do anything with the machine other than keep working. During a parked, or Manual Regeneration, the monitor will give the operator the appropriate instructions on what to do with the machine, making it as simple as possible.

In-Cab Control

- Select and set up attachments
- Track or monitor up to 13 service interval reminders
- Engine idle shutdown, which, when selected, safely shuts off the engine after 3 minutes of idling to conserve fuel
- Adjust hydraulic flow
- Option to adjust and set auxiliary hydraulic flows and pressures (*210, 250, 300, 350 models only*)
- 18 languages available

Monitor

- Fuel consumption gauge
- Full color display of standard rear view camera AND optional side-view camera on the same screen
- Monitor engine coolant and hydraulic oil temperatures
- Displays fuel level, travel mode, work mode and attachment mode
- System/Machine warning messages
- Work tool settings





A standard rear-view camera displays a panoramic view of the worksite from the rear of the machine, an optional side-view camera is available.



From the Computer Menu, you can change the monitor language, program service reminders and change auxiliary settings for flow and pressure to name a few.

Engine



The fuel-efficient, powerful, productive, quiet and long-lasting Isuzu engine LBX uses in the Link-Belt X3 series meets the EPA's Interim Tier 4 (Tier 4a) requirements by way of cooled exhaust gas recirculation (EGR) technology and a diesel particulate diffuser system (DPD). The DPD consists of a diesel oxidation catalyst (DOC) and a diesel particulate filter (DPF) for "passive regeneration" of exhaust emissions. This is the cleanest running and most fuel efficient engine used in a Link-Belt excavator to date.

A new variable geometry turbocharger (VGT) helps optimize the combustion process and ensures consistent boost pressure during low engine rpm's. This maintains efficient machine performance and helps eliminate harmful nitrous oxides (NOx) from forming.

The X3 has three engine work modes to give the operator full control of the machine for the job at hand:



- **Speed Priority (SP mode)** is the fastest and most productive mode giving the operator peak machine performance to get the job done quickly.
- **Heavy (H mode)** is a perfect combination of fuel efficiency and productivity. It really is the best of both worlds!
- **Applied Power (A mode)** gives the operator 13 different engine rpm settings to choose from to easily fine tune the machine to the specific job at hand. This mode is perfect for heavy lifting, fine grading or leveling work, and pipeline contractors use it to safely set pipe down into the trench.



Intelligent Design

- Quiet
- Long-lasting
- One-touch idle and auto idle functions conserve fuel
- Idle start protects a cold engine from over-revving
- Auto engine warm up feature gradually increases engine speed until normal operating temperature is achieved

Hydraulics

The Link-Belt X3's from LBX are equipped with two Kawasaki variable-displacement axial-piston pumps and one Kawasaki gear pump installed in-line with the engine. This is the most efficient hydraulic pump layout – keeping engine rpm's low while producing plenty of hydraulic muscle.



The X3 uses an open center hydraulic system which refers to the open passage in the control valve that allows the hydraulic oil to return to tank when the control valve is centered. This design gives the machine a much smoother feeling when operating and also eliminates excess pressure throughout the system, which, in turn, helps to conserve fuel.

Powerful & Productive

- Auto Power Boost gives 9% more hydraulic pressure (power) for 8 seconds
- More speed through larger hydraulic lines
- Improved oil regeneration circuits

Safe

- Boom and arm holding valves
- Standard hydraulic control pattern change valve to move between ISO and SAE
- Standard straight-line travel on 250 class and larger
- Optional "Free Swing" auto-centers the machine over the load and takes out the pendulum effect of large, long loads

Long-lasting

- Continuous filtration of 5000-hour hydraulic oil through a 6 micron, full-flow return filter
- Less wear due to reduced back pressure



Serviceability

Easy to maintain

- Ground level access to:
  - ✓ Batteries
  - ✓ Dual fuel filters with water separators
  - ✓ Engine oil filter
  - ✓ Dual element air filter
  - ✓ Cab fresh air filter
- Green drain plug and hose
- Easy-open engine hood
- Easy-access in-cab fuse box accessible while seated in cab seat
- Side-by-side oil cooler/radiator design is easy to clean
- Quick and easy access to grease all attachment pivot points
- Grease cylinder track adjusters make adjusting track tension a breeze

Maintenance reminders

- In-cab monitor will track 13 different serviceable items:
  - ✓ 5 reminders for engine items
  - ✓ 5 for hydraulic items
  - ✓ 3 other reminders

Simple

- Flexible and heat-resistant color-coded wiring harnesses
- External fuel site gauge can be viewed from ground-level to see fuel levels
- Lube and maintenance charts posted inside toolbox for readability and protection from the elements

Performance

Improvements and Optimizations

- 7% increased lift capacity over X2 series
- 10% better fuel efficiency than X2 series
- 8% faster cycle times
- Time will be saved in switching out the attachment tools via the in-cab monitor









Innovation at Work



Durability

LBX built the Link-Belt X3 series to last, and they come with one of the best standard warranties in the industry. We back our machines with a 1-year / 1,800 hour full machine warranty, a 2-year / 3,000 hour engine warranty, and a 3-year / 10,000 hour XtraStructure warranty that even covers the turntable bearing and tub.

LBX Warranty CERTIFIED PRODUCT SUPPORT



EMS (Extended Maintenance System) chrome pins and grease impregnated brass bushings with graphite inserts reduce wear-and-tear and can be found throughout the attachment. This design makes it possible to extend lube intervals to 6 months or 1,000 hours at all pivot points excluding the bucket which is monthly or 250 hours, whichever comes first.

Strong

- All booms and arms are ultrasound tested at the factory
- X-Pattern carbody made with high tensile strength steel
- Turntable bearing tub extends through the carbody and is welded on top and bottom
- Factory standard belly pan guard
- D-channel sideframes provide excellent impact resistance
- Cab is FOPS level 1 and ROPS certified
- Thicker steel plating on the attachment
- Standard HD linkage on 350 X3 and 470 X3 and on all Link-Belt X3 excavators ordered with factory hydraulic packages



X-Pattern carbody



Turntable bearing tub

Options

- Pre-existing mounting bosses make adding additional guarding easy
- Rubber bumper guarding
- Catwalks

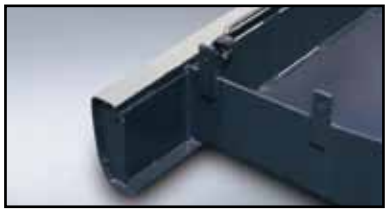

D-channel sideframes



Specifications

Engine

Isuzu AL-6HK1X Tier 4A turbocharged diesel engine with electronic control (ECM) and high pressure common-rail fuel injection, 6-cylinder, Water-cooled, Cooled Exhaust Gas Recirculation (CEGR), Intercooler, Variable-Geometry Turbocharger (VGT), Diesel Particulate Diffuser (DPD) with Diesel Oxidation Catalyst (DOC) and Diesel Particulate Filter (DPF) for "passive regeneration" of exhaust emissions, Electronic fuel pump and priming, Fuel cooler, Auto-idle start, Auto warm-up, EPF engine protection, Dual-stage fuel filtration, In-cab fuel filter restriction indicator, Remote oil filter, Green plug oil drain, Double element air filter.

SAE net horsepower...266 hp (198 kW) @ 1,900 rpm
Displacement.....475 cu in (7.8 L)
Maximum Torque...769 lbf-ft (1,043 Nm) @ 1,500 rpm
Starter 24V-5.0kW
Alternator.....50 amp
Battery..... (2) 12-volt 128 amp hours

Cab and Controls

ROPS certified cab with climate control A/C and heat with defroster, Control panel with LED Hi-Definition color monitor, Rearview camera display, Fuel-efficiency gauge, DPF regeneration gauge, Low-effort joysticks pre-wired for auxiliary hydraulics, Control pattern changer, Safety glass windows, Sunroof with sunshade, Shockless cab suspension with four fluid mountings, KAB® reclining suspension seat, Sliding 4-position tilting control consoles, AM/FM sound system with MP3 auxiliary input jack, Digital clock, Dome light, Seat belt, Coat hook, Cup holder, Storage compartments, Floor mat, Footrests, Ashtray, 24-volt cigarette lighter, 12-volt outlet, Travel alarm, Handrails, Mirrors, Side-entry cab filter, Spare parts kit.

Four selectable working modes, Anti-theft password protection system, On-board self-diagnostic system with memory and service interval reminders, Auto-idling system, One-touch decelerator, Auto-idle engine shutdown, Auto-power boost, Neutral safety start, Gate-lock safety shutoff.

A/C Rating .....19,840 BTU/h
Heater Rating .....21,030 BTU/h
Sound Level - Cab Interior..... 73.0 dB(A)
Sound Level - Exterior..... 104.0 dB(A)

Hydraulic System

Open-center system, Two variable-displacement axial-piston pumps and one gear pump for pilot controls, Main control valve with one 4-spool section and one 5-spool section with auxiliary spool: stackable, Auxiliary Control System, Oil cooler, Auto-power boost, Boom and arm holding valves, 6 micron return filter, Firewall.

Hydraulic Pumps
Pump Output .....2 x 72.3 gpm (285 L/min)
Pilot Pump Maximum Flow ...7.5 gpm (28.5 L/min)

Relief Valve Settings
Boom/Arm/Bucket..... 4,970 psi (34.3 MPa)
in Power Boost ..... 5,410 psi (37.3 MPa)
Swing Circuit..... 4,410 psi (30.4 MPa)
Travel Circuit ..... 4,970 psi (34.3 MPa)

Hydraulic Cylinders
number of cylinders - bore x rod x stroke
Boom ..... 2 - 5.7" x 3.9" x 58.9"
(145 mm x 100 mm x 1,495 mm)
Arm ..... 1 - 6.7" x 4.7" x 68.8"
(170 mm x 120 mm x 1,748 mm)
Bucket .....5.9" x 4.1" x 47.6"
(150 mm x 105 mm x 1,210 mm)

Swing

Planetary reduction powered by axial-piston motor, Internal ring gear with grease cavity for swing pinion, Swing bearing is single-row, shear type ball bearing, Mechanical disc swing brake, Auto-power swing.

Swing Speed.....9.7 rpm
Tail Swing .....11' 8" (3.55 m)
Swing Torque .....82,600 lbf-ft (112.0 kNm)

Undercarriage

X Pattern carbody with 16' 4" (4.98m) LC long undercarriage by 8' 6" (2.60m) track gauge, Sealed and strutted track chain with track guide, Sealed rollers and idlers, Two-speed independent hydrostatic travel with compact planetary final drive, Disc type brakes, Adjustable track tension, Carbody belly pan.

Carrier Rollers .....2 per Side
Track Rollers .....8 per Side
Track Link Pitch ..... 8.50" (216 mm)
Shoes ..... 48 per Side
Shoe Width.....31.5" (800 mm)
Ground Pressure .....7.40 psi (0.051 MPa)

Travel System

Two-speed independent hydrostatic travel with compact axial-piston motors, Hydraulic motor powered output shaft coupled to a planetary reduction drive and track sprocket, All hydraulic components mounted within the width of side frame, Automatic downshift for high torque to overcome obstacles, Spring-applied hydraulic release parking brake built into each motor, Travel motors equipped with counterbalance valve to prevent over-speeding down an incline, Single-pedal straight line travel.

Travel Speeds...2.0 - 3.3 mph (3.2 - 5.3 km/h)
Drawbar Pull .....60,000 lbf (267 kN)
Gradeability..... 70% (35°)

Attachment

Boom .....21' 2" (6.45 m)

Available Arms	Digging Force
• 10' 8" (3.25 m)	36,850 lbf (164 kN)
with Auto Power Boost	40,020 lbf (178 kN)
• 8' 8" (2.63 m)	43,840 lbf (195 kN)
with Auto Power Boost	47,430 lbf (211 kN)
• 13' 3" (4.04 m)	31,590 lbf (141 kN)
with Auto Power Boost	34,310 lbf (153 kN)

Bucket Digging Force.....51,440 lbf (229 kN)
with Auto Power Boost 55,840 lbf (248 kN)

Lubricant and Coolant Capacity

Fuel Tank.....153.2 Gallons (580.0 Liters)
Hydraulic System ...92.5 Gallons (350.0 Liters)
Hydraulic Tank.....46.2 Gallons (175.0 Liters)
Final Drive (per side) ... 2.9 Gallons (11.0 Liters)
Swing Drive .....1.3 Gallons (5.0 Liters)
Engine Oil.....12.9 Gallons (49.0 Liters)
Coolant System.....9.4 Gallons (35.4 Liters)

Operating Weight

Working weight with 31.5" (800 mm) shoes, 21' 2" (6.45 m) boom, 10' 8" (3.25 m) arm, 2,580 lb. (1 170 kg) bucket, 16,315 lb. (7 400 kg) counterweight
..... 80,028 lbs. (36 300 kg)

Working Range

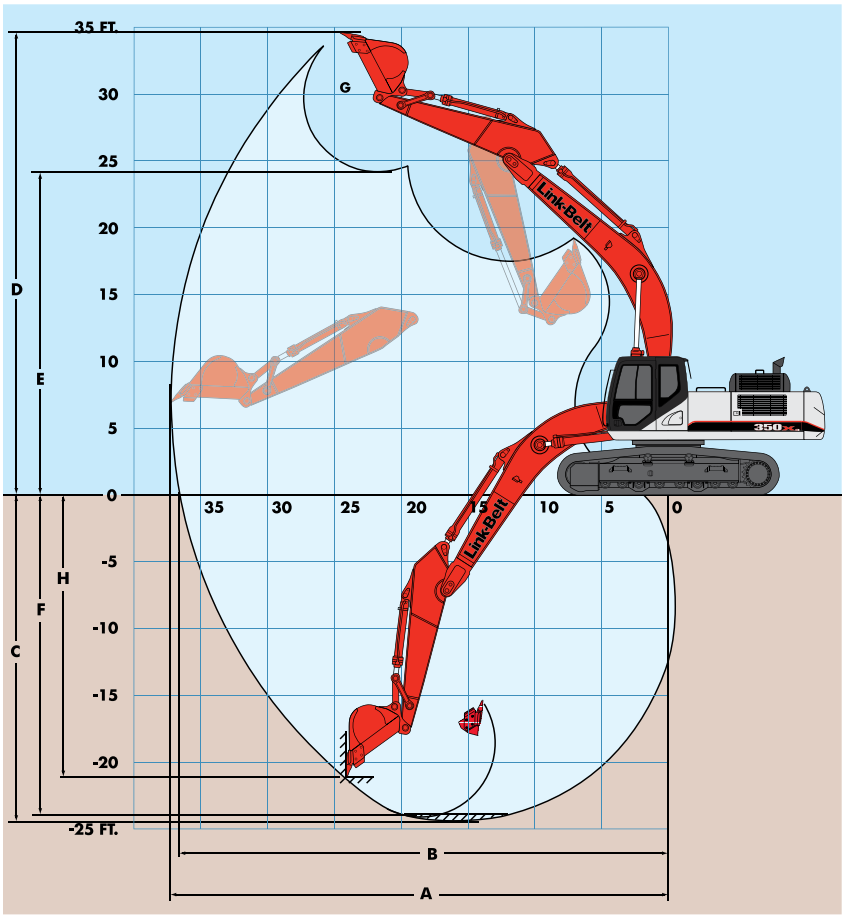

Machine Equipped with 21′ 2″ (6.45 m) Boom	Arm 10′ 8″ (3.25 m)	Arm 8′ 8″ (2.63 m)	Arm 13′ 3″ (4.04 m)
A. Maximum reach	36′ 8″ (11.17 m)	35′ 0″ (10.67 m)	39′ 1″ (11.90 m)
B. Maximum reach @ ground level	36′ 0″ (10.98 m)	34′ 4″ (10.47 m)	38′ 5″ (11.72 m)
C. Maximum dig depth	24′ 1″ (7.34 m)	22′ 1″ (6.73 m)	26′ 8″ (8.14 m)
D. Maximum dig height	34′ 0″ (10.37 m)	33′ 10″ (10.32 m)	35′ 0″ (10.67 m)
E. Maximum dump height	23′ 9″ (7.23 m)	23′ 5″ (7.14 m)	24′ 9″ (7.54 m)
F. Digging depth 8′ (2.44 m) level bottom	23′ 7″ (7.19 m)	21′ 6″ (6.55 m)	26′ 3″ (8.01 m)
G. Bucket rotation	173°	173°	173°
H. Maximum vertical wall depth	20′ 10″ (6.35 m)	19′ 7″ (5.97 m)	23′ 5″ (7.15 m)

Travel Dimensions

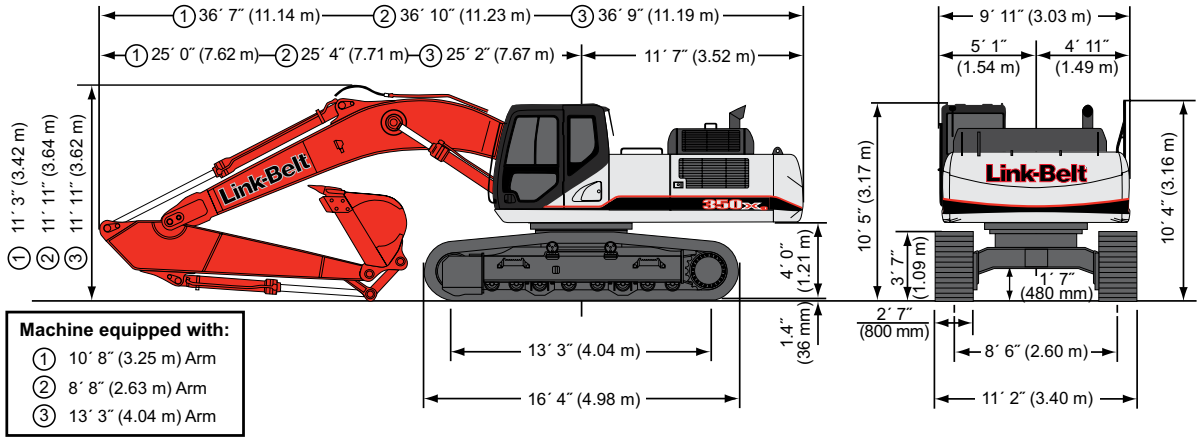

Machine equipped with:
① 10′ 8″ (3.25 m) Arm
② 8′ 8″ (2.63 m) Arm
③ 13′ 3″ (4.04 m) Arm

Notes: Excavator lifting capacities

1. Lifting capacities shown should not be exceeded. Weight of all lifting accessories must be deducted from the above lifting capacities.
2. Lifting capacities are based on machine standing on firm, uniform supporting surface. User must make allowances for job conditions such as soft or uneven ground.
3. Lifting capacities shown do not exceed 75% of minimum tipping loads or 87% of hydraulic capacities. Capacities marked with an asterisk (*) are limited by hydraulic capacities.
4. Least stable position is over the side.
5. Operator should be fully acquainted with the Operator's Manual & Operating Safety Booklet, furnished by LBX before operating the machine.
6. Capacities apply only to the machine as originally manufactured and normally equipped by LBX Company, LLC.
7. Lift capacity ratings are based on ISO 10567, "Earthmoving Machinery - Hydraulic Excavators - Lift Capacity."

Lifting Capacities - ISO Ratings

Radius of Load
10´ 8˝ (3.25 m) Arm with 21´ 2˝ (6.45 m) Boom and 2,577 lb. (1 169 kg) Bucket with Power-Boost Applied

		5´ 0˝ (1.5 m)		10´ 0˝ (3.0 m)		15´ 0˝ (4.5 m)		20´ 0˝ (6.0 m)		25´ 0˝ (7.5 m)		30´ 0˝ (9.0 m)		35´ 0˝ (10.5 m)		Cap at Max. Reach	
		End	Side	End	Side	End	Side	End	Side	End	Side	End	Side	End	Side	End	Side
+30´ 0˝ (9.0 m)	**lbs** kg															**8,600*** 3 850*	**8,600*** 3 850*
+25´ 0˝ (7.5 m)	**lbs** kg									**14,050*** 6 610*	**14,050*** 6 610*	**9,650*** 5 210*	**9,650*** 5 210*			**8,000*** 3 620*	**8,000*** 3 620*
+20´ 0˝ (6.0 m)	**lbs** kg									**16,250*** 7 420*	**15,700** 7 280	**14,750*** 6 730*	**11,450** 5 350			**7,800*** 3 540*	**7,800*** 3 540*
+15´ 0˝ (4.5 m)	**lbs** kg							**20,900*** 9 670*	**20,900*** 9 670*	**17,800*** 8 220*	**15,350** 7 130	**15,800*** 7 280*	**11,150** 5 190			**7,900*** 3 580*	**7,900*** 3 580*
+10´ 0˝ (3.0 m)	**lbs** kg			**46,750*** 18 010*	**46,750*** 18 010*	**33,950*** 15 830*	**32,300** 14 990	**24,750*** 11 470*	**20,900** 9 690	**20,050*** 9 260*	**14,600** 6 780	**16,600** 7 720	**10,700** 4 990	**9,250*** 5 320*	**8,050** 3 770	**8,200*** 3 710*	**7,950** 3 600
+5´ 0˝ (1.5 m)	**lbs** kg			**17,600*** 7 490*	**17,600*** 7 490*	**39,450*** 18 080*	**30,300** 14 060	**28,000*** 12 950*	**19,600** 9 100	**21,600** 10 030	**13,850** 6 450	**16,150** 7 510	**10,300** 4 800	**9,200*** 5 460*	**7,850** 3 670	**8,700*** 3 940*	**7,850** 3 550
Ground Line	**lbs** kg			**23,700*** 10 510*	**23,700*** 10 510*	**41,250*** 18 950*	**28,750** 13 370	**29,750*** 13 750*	**18,650** 8 670	**21,050** 9 800	**13,300** 6 190	**15,800** 7 350	**10,000** 4 650			**9,550*** 4 330*	**8,050** 3 660
-5´ 0˝ (1.5 m)	**lbs** kg	**23,500*** 10 500*	**23,500*** 10 500*	**32,100*** 14 270*	**32,100*** 14 270*	**41,050*** 18 960*	**28,500** 13 250	**29,600** 13 780*	**18,250** 8 480	**20,750** 9 650	**13,000** 6 050	**15,650** 7 280	**9,850** 4 580			**10,950*** 4 940*	**8,750** 3 950
-10´ 0˝ (3.0 m)	**lbs** kg	**32,300*** 14 510*	**32,300*** 14 510*	**43,250*** 19 160*	**43,250*** 19 160*	**39,050*** 18 050*	**28,750** 13 380	**28,900*** 13 370*	**18,350** 8 520	**20,850** 9 680	**13,150** 6 100					**13,350*** 5 990*	**10,050** 4 530
-15´ 0˝ (4.5 m)	**lbs** kg	**43,000*** 19 170*	**43,000*** 19 170*	**48,150*** 22 330*	**48,150*** 22 330*	**34,350*** 15 950*	**29,450*** 13 680	**25,600*** 11 930*	**18,850** 8 750	**18,600*** 8 820*	**13,700** 6 380					**16,250*** 7 400*	**12,600** 5 630
-20´ 0˝ (6.0 m)	**lbs** kg			**34,250*** 16 200*	**34,250*** 16 200*	**25,100*** 11 910*	**25,100*** 11 910*	**17,100*** 8 390*	**17,100*** 8 390*							**15,500*** 7 110*	**15,500*** 7 110*

Radius of Load
8´ 8˝ (2.63 m) Arm with 21´ 2˝ (6.45 m) Boom and 2,731 lb. (1 239 kg) Bucket with Power-Boost Applied

		5´ 0˝ (1.5 m)		10´ 0˝ (3.0 m)		15´ 0˝ (4.5 m)		20´ 0˝ (6.0 m)		25´ 0˝ (7.5 m)		30´ 0˝ (9.0 m)		Cap at Max. Reach	
		End	Side	End	Side	End	Side	End	Side	End	Side	End	Side	End	Side
+30´ 0˝ (9.0 m)	**lbs** kg													**12,300*** 5 520*	**12,300*** 5 520*
+25´ 0˝ (7.5 m)	**lbs** kg									**16,300*** 7 460*	**15,700*** 7 280			**11,350*** **5 130***	**11,350*** **5 130***
+20´ 0˝ (6.0 m)	**lbs** kg									**17,500*** 7 980*	**15,400** 7 170	**15,650*** 7 150*	**10,950** 5 120	**11,000*** 4 980*	**10,000** 4 500
+15´ 0˝ (4.5 m)	**lbs** kg					**27,750*** 12 770*	**27,750*** 12 770*	**22,250*** 10 310*	**21,250** 9 870	**18,700*** 8 650*	**14,750** 6 870	**16,500** 7 640	**10,700** 4 980	**11,000*** 5 000*	**8,900** 4 010
+10´ 0˝ (3.0 m)	**lbs** kg					**33,400*** 15 490*	**31,450** 14 590	**25,850*** 11 980*	**20,100** 9 340	**20,650*** 9 540*	**14,050** 6 530	**16,150** 7 530	**10,300** 4 800	**11,300*** 5 120*	**8,350** 3 780
+5´ 0˝ (1.5 m)	**lbs** kg					**38,700*** 17 890*	**29,100** 13 500	**28,550*** 13 220*	**18,900** 8 780	**21,200** 9 860	**13,400** 6 230	**15,750** 7 340	**9,950** 4 630	**11,850*** 5 390*	**8,250** 3 730
Ground Line	**lbs** kg					**40,700*** 18 760*	**28,050** 13 030	**29,500** 13 690*	**18,150** 8 420	**20,650** 9 610	**12,900** 6 000	**15,500** 7 210	**9,700** 4 510	**12,950*** 5 880*	**8,550** 3 870
-5´ 0˝ (1.5 m)	**lbs** kg	**21,300*** 9 190*	**21,300*** 9 190*	**32,150*** 14 290*	**32,150*** 14 290*	**39,950*** 18 440*	**28,200** 13 130	**29,200** 13 560*	**17,900** 8 330	**20,500** 9 520	**12,750** 5 930	**15,550** 7 220	**9,750** 4 520	**14,750*** 6 670*	**9,400** 4 250
-10´ 0˝ (3.0 m)	**lbs** kg	**35,600*** 15 950*	**35,600*** 15 950*	**46,750*** 20 670*	**46,750*** 20 670*	**36,900*** 17 060*	**28,650** 13 330	**27,600*** 12 780*	**18,200** 8 450	**20,550** 9 550	**13,100** 6 060			**16,500*** 7 450*	**11,050** 4 970
-15´ 0˝ (4.5 m)	**lbs** kg			**41,600*** 19 330*	**41,600*** 19 330*	**30,800*** 14 340*	**28,950** 13 470	**22,850*** 10 720*	**18,800** 8 750					**15,650*** 7 150*	**14,400** 6 440

Radius of Load
13´ 3˝ (4.04 m) Arm with 21´ 2˝ (6.45 m) Boom and 2,306 lb. (1 046 kg) Bucket with Power-Boost Applied

		5´ 0˝ (1.5 m)		10´ 0˝ (3.0 m)		15´ 0˝ (4.5 m)		20´ 0˝ (6.0 m)		25´ 0˝ (7.5 m)		30´ 0˝ (9.0 m)		35´ 0˝ (10.5 m)		Cap at Max. Reach	
		End	Side	End	Side	End	Side	End	Side	End	Side	End	Side	End	Side	End	Side
+30´ 0˝ (9.0 m)	**lbs** kg															**6,700*** 3 010*	**6,700*** 3 010*
+25´ 0˝ (7.5 m)	**lbs** kg											**11,300*** **5 340***	**11,300*** **5 340***			**6,250*** **2 830***	**6,250*** 2 830*
+20´ 0˝ (6.0 m)	**lbs** kg											**13,100*** 5 980*	**11,750** 5 480	**7,800*** 4 200*	**7,800*** 4 010	**6,100*** 2 780*	**6,100*** 2 780*
+15´ 0˝ (4.5 m)	**lbs** kg									**15,850*** 7 320*	**15,550*** 7 210	**14,500*** 6 710*	**11,350** 5 280	**11,000*** 5 420*	**8,400** 3 920	**6,200*** 2 810*	**6,200*** 2 810*
+10´ 0˝ (3.0 m)	**lbs** kg					**29,650*** 13 780*	**29,650*** 13 780*	**22,450*** 10 380*	**21,200** 9 840*	**18,500*** 8 540*	**14,850** 6 900	**15,900*** 7 320*	**10,850** 5 050	**12,750** 5 970	**8,100** 3 790	**6,400*** 2 910*	**6,400*** 2 910*
+5´ 0˝ (1.5 m)	**lbs** kg			**29,650*** 12 640*	**29,650*** 12 640*	**36,550*** 16 950*	**31,100** 14 440	**26,150*** 12 100*	**19,950** 9 260	**20,700*** 9 550*	**14,000** 6 510	**16,200** 7 540	**10,350** 4 810	**12,500** 5 820	**7,850** 3 660	**6,800*** 3 090*	**6,800*** 3 090*
Ground Line	**lbs** kg	**11,800*** 5 290*	**11,800*** 5 290*	**25,500*** 11 250*	**25,500*** 11 250*	**40,250*** 18 610*	**28,950** 13 450	**28,650*** 13 240*	**18,750** 8 700	**21,100** 9 810	**13,300** 6 180	**15,750** 7 320	**9,900** 4 610	**12,250** 5 700	**7,600** 3 550	**7,450*** 3 390*	**7,000** 3 180
-5´ 0˝ (1.5 m)	**lbs** kg	**20,550*** 9 230*	**20,550*** 9 230*	**30,550*** 13 580*	**30,550*** 13 580*	**40,850*** 18 850*	**28,000** 13 020	**29,400** 13 660*	**18,000** 8 360	**20,550** 9 560	**12,800** 5 960	**15,450** 7 180	**9,650** 4 480	**8,900*** 5 280*	**7,550** 3 500	**8,500*** 3 840*	**7,500** 3 400
-10´ 0˝ (3.0 m)	**lbs** kg	**27,950*** 12 530*	**27,950*** 12 530*	**38,700*** 17 180*	**38,700*** 17 180*	**39,950*** 18 440*	**28,050** 13 040	**29,100** 13 480*	**17,900** 8 310	**20,450** 9 510	**12,750** 5 920	**15,500** 7 190	**9,650** 4 490			**10,150*** 4 580*	**8,450** 3 820
-15´ 0˝ (4.5 m)	**lbs** kg	**38,300*** 17 030*	**38,300*** 17 030*	**50,600*** 22 670*	**50,600*** 22 670*	**36,850*** 17 070*	**28,550** 13 260	**27,250*** 12 640*	**18,200** 8 450	**20,450*** 9 500	**13,100** 6 060					**13,200*** 5 890*	**10,250** 4 590
-20´ 0˝ (6.0 m)	**lbs** kg			**42,750*** 20 040*	**42,750*** 20 040*	**30,300*** 14 200*	**28,800** 13 400	**22,150*** 10 470*	**18,750** 8 720							**15,000*** 6 870*	**13,850** 6 130

350X3

Standard and Optional Equipment

CAB

12V Power Outlet ✓
24V Lighter ✓
AM/FM Sound System ✓
Anti-Theft Device ✓
Ashtray ✓
Auxiliary Switches on Control Lever ✓
Cab Exterior Light Harness ✓
Cab Filter - External ✓
Cab Handrails ✓
Cab Interior Light ✓
Cab Lights ●
Cab Iso-Mounts ✓
Clear Roof Window ✓
Climate Control A/C and Heater ✓
Console Tilt ✓
Cup Holder ✓
Defroster ✓
Digital Clock ✓
ECO Gauge ✓
Emergency Exit and Hammer ✓
Face Vent ✓
Floor Mat ✓
FOPS Head Guard (Level 2) ●
Front Guard (mesh) ●
Front Guard (OPG 1,2) ●
Front Window One-Touch Lock ✓
Gate Lock Hydraulic Activation ✓
Horn ✓
Hot & Cool Box ✓
Hour Meter - Digital ✓
KAB 815 Suspension Seat ✓
KAB 855 Air-Suspension ●
LED Color Monitor ✓
Magazine Rack ✓
Maintenance Interval Reminders ✓
MP3 Auxiliary Input Jack ✓
On-Board Diagnostic System ✓
One-Piece Right Window ✓
Radio Mute Switch ✓
Rain Deflector ●
Rear View Camera ✓
Rear View Mirrors ✓
Roof Sun Shade ✓
ROPS Certified ✓
Safety Glass Windows ✓
Seat Recline ✓
Selectable Monitor Languages ✓
Side View Camera ●
Small Storage ✓
Sun Visor ●
Travel Alarm with Cancel Switch ✓
Trip Meter - Digital ✓
Vandal Cover (front window) ●
Wiper & Washer ✓
Wiper Switch on RH Joystick ✓

ENGINE

Air Filter - Double Element ✓
Air Filter Restriction Indicator ✓
Air Pre-Cleaner ✓
Auto Warm-Up System ✓
Auto-Idle ✓
Auto-Idle Engine Shutdown ✓
CEGR - Cooled Exhaust Gas Recirculation ✓
Cooling Fan ✓
Diesel Oxidation Catalyst (DOC) ✓
Diesel Particulate Filter (DPF) ✓
Drain for Fuel Tank ✓
Dual Remote Fuel Filters with Water Separation ✓
EGR Coolers ✓
Emergency Engine Stop ✓
Engine Idle System ✓
Remote Engine Oil Drain ✓
Engine Protection Feature ✓
External Fuel Gauge ✓
Fan Housing ✓
Fuel Filter Restriction Indicator ✓
Fuel Management System ü Fuel Shut-Off Valve ✓
Fuel Usage Monitor ✓
Glow Plug Pre-Heat ✓
Idle-Start ✓
Intercooler ✓
Neutral Start ✓
One-Touch Idle ✓
Passive Emissions-Regeneration ✓
Radiator / Oil Cooler Protective Screen ✓
Regeneration Gauge on Monitor ✓
Remote Oil Filter ✓
VGT Turbocharger ✓

HYDRAULICS

Arm Regeneration ✓
Arm Speed Assistance - 2 Pump Flow ✓
Attachment Cushion Valve ✓
Auto Swing Priority ✓
Auxiliary Flow Control ✓
Auxiliary Tool Settings - Memory ✓
Auxiliary Valve ✓
Boom Regeneration ✓
Boom Speed Assistance - 2 Pump Flow ✓
Bucket Curl Assist ✓
Control Levers Pre-Wired for Auxiliary ✓
Control Pattern Changer (2 way) ✓
Fire Wall ✓
Free Swing ●
Holding Valve - Arm ✓
Holding Valve - Boom ✓
Hose Burst Check Valve ●
Hydraulic Filter Restriction Indicator ✓
Long Life Hydraulic Oil - 5,000 Hour ✓
Neutral Pump De-stroke ✓
Oil Cooler ✓
Power Boost ✓
Pressure Reading on Monitor ✓
Pump Stand-By Pressure ✓
Single Pedal Travel ✓
Straight Travel Circuit ✓

AUXILIARY HYDRAULIC OPTIONS

Single-Acting Aux. w/ Switch Activation ●
Single-Acting Aux. w/ Pedal Activation ●
Thumb Aux. w/ Switch Activation ●
Multi-Function Aux. w/ Switch Activation ●
Secondary Aux. w/ Switch Activation ●
Combination Aux. w/ Switch Activation ●
Combination Aux. w/ in-cab pressure setting control ●

UNDERCARRIAGE

600 mm shoes (23.6 in) 3-Bar Steel ●
700 mm shoes (27.5 in) 3-Bar Steel ●
800 mm shoes (31.5 in) 3-Bar Steel ✓
Steps ✓
Carbody Belly Pan (swivel guard) ✓
Center Track Guide (single) ✓
Track Guide (triple) ●
Long Undercarriage ✓
Sealed Link Chain ✓
Strutted Track Chain ✓
X-Pattern Carbody ✓

UPPERSTRUCTURE

Belly Pans ✓
Catwalks ●
Center Cover (Over Main CV) ✓
Fuel Tank Belly Pan ✓
Hand Rail - RH Access ✓
Lifting Eyes for Counterweight ✓
Lockable Fuel Cap and Service Doors ✓
Rubber Bumper Guards ●
Tool Box - Lockable ✓
Turntable Tub ✓
Work Lights - Boom and Tool Box ✓

ATTACHMENT

8′ 8″ (2.63 m) Short Arm ●
10′ 8″ (3.25 m) Arm ●
13′ 3″ (4.04 m) Long Arm ●
21′ 2″ (6.45 m) Main Boom Section ●
Attachment Reinforcement Plate (boom+arm) ●
Auxiliary Pipe Brackets ✓
Boom Work Light ✓
Bucket Anti-Clatter Device ✓
Chrome pins ✓
Easy Maintenance System ✓
HD Bucket Link ●
Quick Couplers ●
Remote Lube Bank ✓
Teardrop pin retention keepers ✓
Thumbs ●

PARTS KIT

Bucket Anti-Clatter Device ✓
Engine Manual ✓
Engine Oil Filter ✓
Filter Wrench ✓
Fuel Filters ✓
Grease Gun ✓
Green Plug Drain Hose for Engine Oil Drain ✓
Hydraulic Return Filter ✓
Ignition Keys ✓
Pilot Circuit Hydraulic Filter ✓
Rearview Mirrors ✓
Work Light for Boom ✓

Equipment Key
Standard ✓ Optional ●

Bucket Sizes

Bucket Type	SAE Heaped Capacity (yd³)	(m³)	Width Outside Lip (in)	(mm)	Bucket Weight (lbs)	(kg)	Number of Teeth	Arm Length 8′ 8″ 2.63 m	10′ 8″ 3.25 m	13′ 3″ 4.04 m
STDP Standard duty plate	1.26	0.96	30	762	2306	1046	4	H	H	H
	1.59	1.22	36	914	2516	1141	4	H	H	H
	1.92	1.47	42	1067	2786	1264	5	H	H	M
	2.25	1.72	48	1219	2956	1341	5	H	M	M
	2.59	1.98	54	1372	3226	1463	6	M	M	L
	2.93	2.24	60	1524	3396	1540	6	L	L	N/A
HDP Heavy duty plate	1.22	0.93	30	762	2886	1309	4	H	H	H
	1.54	1.18	36	914	3131	1420	4	H	H	H
	1.86	1.42	42	1067	3459	1569	5	H	H	M
	2.19	1.67	48	1219	3704	1680	5	H	M	L
	2.53	1.93	54	1372	4031	1828	6	M	M	L
XDP Extreme duty plate	1.22	0.93	30	762	3327	1509	4	H	H	H
	1.54	1.18	36	914	3620	1642	4	H	H	H
	1.86	1.42	42	1067	3994	1812	5	H	H	M
	2.48	1.90	48	1219	4287	1945	5	M	M	L
POWER HDP for use with ESCO multi-pin grabber only	1.08	0.83	30	762	3461	1570	4	H	H	H
	1.35	1.03	36	914	3688	1673	4	H	H	H
	1.62	1.24	42	1067	3860	1751	5	H	H	M
	1.90	1.45	48	1219	4030	1828	5	H	H	M
	2.18	1.67	54	1372	4257	1931	6	M	M	L
DITCH	2.20	1.68	72	1829	2971	1348	0	H	H	M

Approval Code For Arm/Bucket Combinations

H.....Heavy material (up to 3,370 lbs./yd³)
M ..... Medium material (up to 2,700 lbs./yd³)
L.....Light material (up to 2,020 lbs./yd³)
N/A..... Not applicable

STDP - Standard duty plate
HDP - Heavy duty plate
XDP - Extreme duty plate
POWER - HDP for use with ESCO multi-pin grabber only

Litho in USA 4/13 #LBX2236
LBX® and Link-Belt® are registered trademarks. Copyright 2013. All rights reserved. We are constantly improving our products and therefore reserve the right to change designs and specifications.
LBX "Different by Design"

McDowell Since 1968
2018 Kingsway Blvd.
Sudbury, Ontario, Canada P3B 4J8
Tel: +1 (705) 566-8190
www.bmcdowell.com
sales@bmcdowell.com