Atlas Copco Underground loaders

Scooptram ST3.5

Technical specification

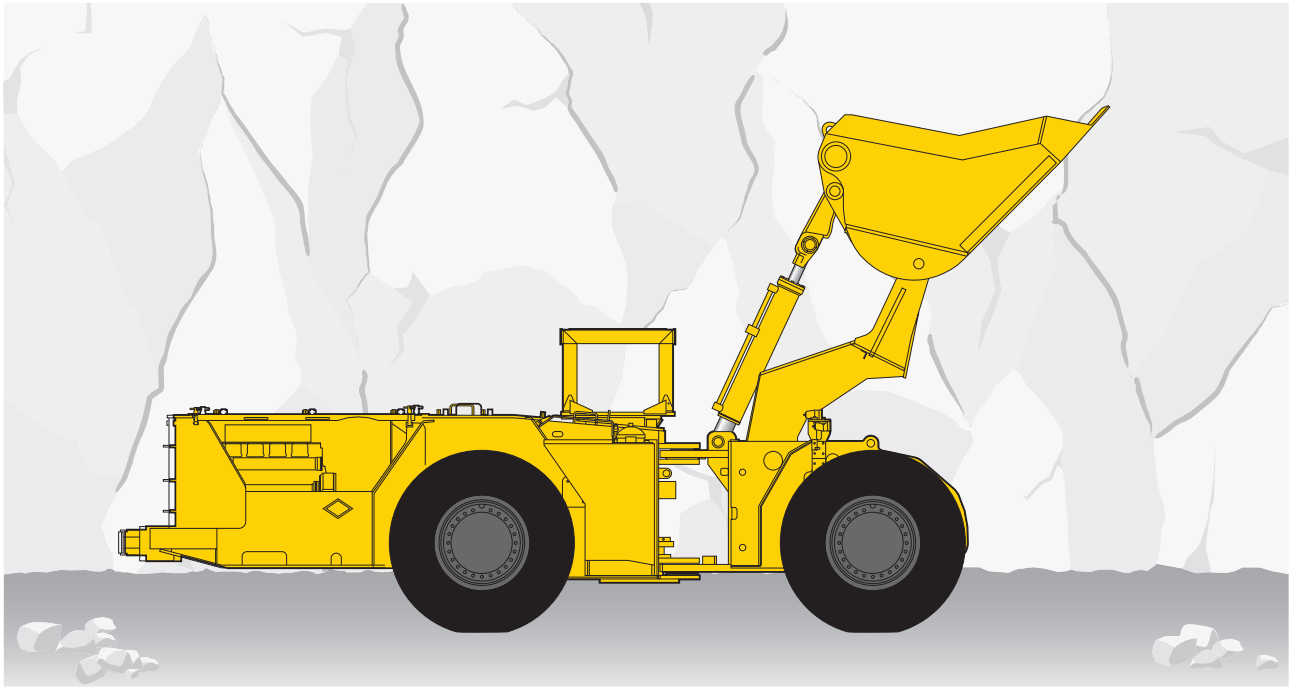

The Scooptram ST3.5 is a 6 000 kg tramming capacity underground loader designed for small to medium sized operations that include development work, production mining, construction sites, and site clean-up activities. The Scooptram ST3.5 has a strong, positive reputation built over time, bucket by bucket.

Features

Load frame

- A parallel boom design matched to an aggressive bucket configuration provide for efficient mucking operations
- Boom support and lock for safe work under boom

Operator's compartment

- Side seated operator position for efficient bi-directional operation with maximum visibility
- Ergonomic operator seat with seat belt for comfort and safety during a full operating shift

Power frame

- Conventional and proven components are well protected within the frame
- Optional turbo charged engine for high altitude applications
- High ground clearance protects the machine from damage

General

- Long life roller bearing centre articulation joint
- Central manual lubrication
- Hydraulic hoses, electrical cables and hot surfaces are well protected
- Three point mounting and anti-skid protection provides safe access for operators and service personnel

Specifications

Capacities	
SAE regulations	
Tramming capacity	6000 kg
Breakout force, hydraulic	9300 kg
Breakout force, mechanical	7915 kg

Motion times	
Boom	
Raising	4.7 seconds
Lowering	5.0 seconds
Bucket	
Dumping	3.6 seconds
Rolling back	3.2 seconds

Engine

- Deutz Diesel ..... F8L-413FW, EPS Tier 1/EUStage I
- MSHA Rating at 2 300 rpm..... 136 kW/185hp
- Maximum torque at 1 500 rpm..... 617 Nm
- Number of Cylinders ..... 8 in "V"
- Displacement ..... 12.8 L (779 in^3)
- Cooling ..... Air
- MSHA Part 7 ventilation:
  - Ventilation rate..... 297 m^3/min
  - Particulate index ..... 269 m^3/min

Transmission

- Modulated power shift, with 3 speeds forward and reverse
- Dana..... Series 32000

Converter

- Single stage
- Dana..... C-270 series

Axles

- Spiral bevel differential, full floating, planetary wheel end drive
- Rock Tough..... 406
- Rear axle, trunnion-mounted, self-lubricating bushings
- Degree of oscillation..... 14° (7° on each side)
- Differentials:
  - Front..... No spin
  - Rear..... Standard

Brakes

- Fully enclosed, multiple wet discs at each wheel end
- Service/parking/emergency ..... SAHR

Electrical system

- System voltage ..... Start & accessories 24 V

Tyres

- Tubeless, nylon, smooth tread design for underground mine service
- Tyre size..... 17.50 x 25 20 ply L-5S

** As applications and conditions vary, Atlas Copco recommends that the user consults with tyre suppliers to obtain the optimum tyre selection.*

Operator's compartment

- Side seated operator for bi-directional operation and maximum visibility
- Canopy; MSHA-ISO ROPS/FOPS certified

Hydraulic system

- Filtration, suction line..... 25 micron
- Dump /hoist system pressure..... 13.8 MPa
- Dump and hoist control; pilot operated, single lever
- Cylinders, double acting, chrome plated stems, diameter:
  - Steer cylinders (2)..... 89 mm
  - Hoist cylinders (2)..... 152 mm
  - Dump cylinder (1)..... 152 mm
- Pumps:
  - Dump /hoist..... 158 L/min at 2,400 rpm
  - Steering ..... 129 L/min at 2,400 rpm

Tank capacities

- Fuel tank capacity..... 216 litres
- Hydraulic tank capacity..... 170 litres

Exhaust system

Catalytic purifier plus exhaust silencer

Steering

Articulated hydraulic power steering, mono-stick control
- System pressure ..... 15.9 Mpa (2,300 psi)

Other

- Fire extinguisher, 6 kg
- Central manual lubrication

Turning radius

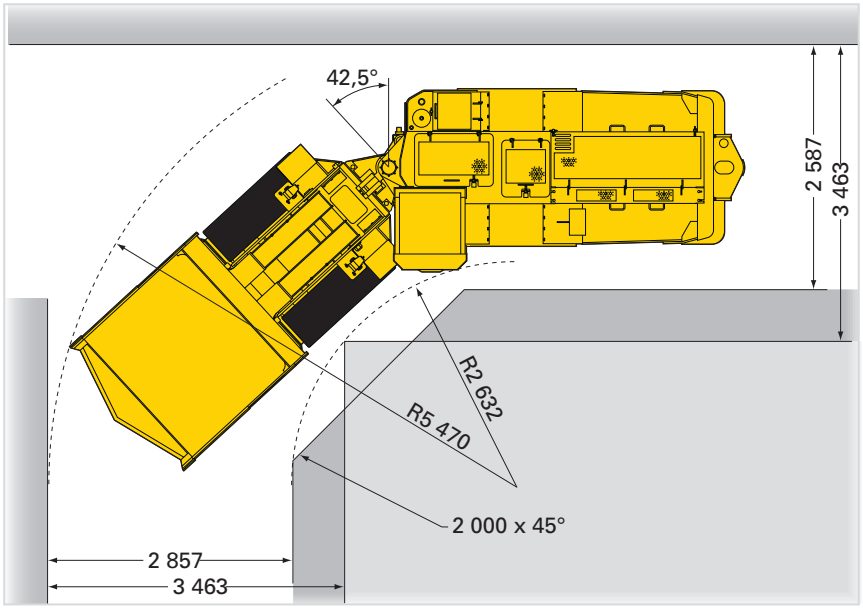

- *Turning angle +/-42.5°*
- *Dimensions shown are based on standard vehicle configuration with 27 mm tyre deflection, unloaded*
- *All dimensions are shown in millimetres*

Grade performance

Standard configuration, bucket empty

Percent grade	0.0	2.0	4.0	6.0	8.0	10.0	12.5	14.3	16.0	18.0	20.0	25.0	30.0
Ratio					1:12	1:10	1:8	1:7			1:5	1:4	
1st gear (km/h)	4.7	4.7	4.7	4.5	4.5	4.3	4.3	4.1	4.1	4.1	4.0	3.9	3.9
2nd gear (km/h)	9.7	9.5	9.2	8.8	8.7	8.3	8.0	7.7	7.2	6.8	6.3	5.0	
3rd gear (km/h)	18.9	17.8	16.7	15.1	13.1	10.9	8.4						

Standard configuration, bucket loaded

Percent grade	0.0	2.0	4.0	6.0	8.0	10.0	12.5	14.3	16.0	18.0	20.0	25.0	30.0
Ratio					1:12	1:10	1:8	1:7			1:5	1:4	
1st gear (km/h)	4.7	4.7	4.5	4.3	4.3	4.1	4.1	4.0	4.0	4.0	3.9	3.5	3.2
2nd gear (km/h)	9.5	9.1	8.8	8.6	8.1	7.7	6.9	6.3	5.6	5.0	4.3		
3rd gear (km/h)	18.3	16.9	14.8	12.1	9.1	6.5							

Optional equipment

Main frame
- Wheel chocks and chock brackets
- Knockdown construction - specify weight and dimension limitations
- Shipping covers
- EOD buckets, recommended for truck loading

Ergonomic
- Wheel steering control

System
- Ansul Checkfire auto fire suppression
- Ansul single bottle fire suppression with engine kill
- Lincoln auto lube with timer
- Manual hydraulic tank fill pump
- Hydraulic oil fill cap retainer

Electrical system
- Audio-visual reverse alarm

Hydraulic system
- EOD hydraulics & controls only
- Brake release tow hook

Controls and instruments
- Low hydraulic level warning
- Scooptram RRC (Line of Sight Radio Remote Control)
- RRC interface only
- Bucket Float
- Block out 3rd gear

Documentation
- LinkOne parts book, CD
- LinkOne viewer
- Parts manual - plasticized
- Service manual - plasticized

Other
- Tool box

Buckets

Bucket data			STD				
Volume, nominal heaped (m^3)		3.4	3.1	2.7	2.3	2.1	1.9
Material density (t/m^3)		1.8	2.0	2.2	2.6	2.8	3.0
Width, bucket (mm)	W	2 121	1 960	1 956	1 956	1 956	1 956
Tramming position: Axle centreline to bucket lip (mm)	T	2 890	2 916	2 788	2 678	2 798	2 697
Truck loading: Reach (mm)	L	793	820	695	587	698	605
Raised position: Back height, max. (mm)	H1	3 967	3 984	3 870	3 844	3 783	3 744
Dump position: Bucket tip, height (mm)	H2	1 338	1 313	1 439	1 546	1 428	1 528

Dimensions and weights*

- Approximate weight .....17 100 kg
- Axle load, front .....8 000 kg
- Axle load, rear .....9 100 kg

**Standard equipped vehicle with empty bucket*

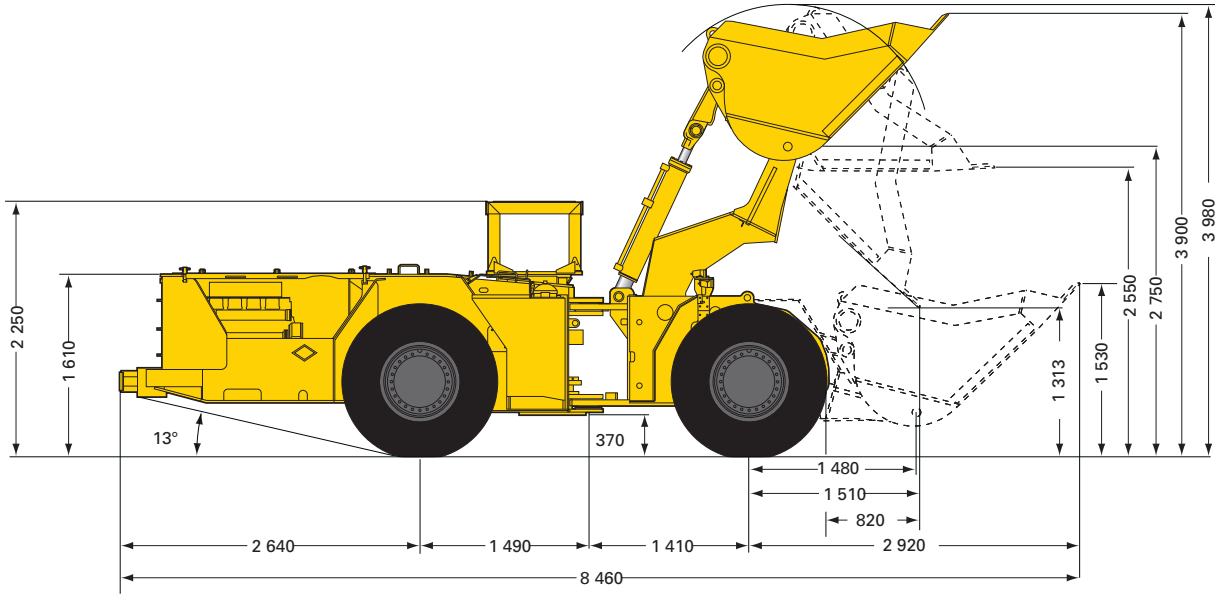

Side view

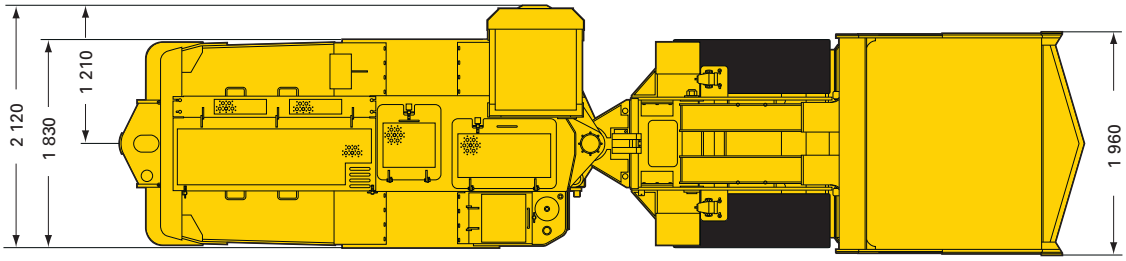

Top view

- *Dimensions shown are based on standard vehicle configuration with 27 mm tyre deflection, unloaded*
- *All dimensions are shown in millimetres*

© Copyright 2010, Atlas Copco Rock Drills AB, Örebro, Sweden. All product names in this publication are trademarks of Atlas Copco. Any unauthorized use or copying of the contents or any part thereof is prohibited. Illustrations and photos may show equipment with optional extras. No warranty is made regarding specifications or otherwise. Specifications and equipment are subject to change without notice. Consult your Atlas Copco Customer Center for specific information.

9851 2254 01 g
08/2010

Atlas Copco

McDowell Since 1968

2018 Kingsway Blvd.
Sudbury, Ontario, Canada P3B 4J8
Tel: +1 (705) 566-8190
www.bmcdowell.com
sales@bmcdowell.com