GRADALL®

XL 3200

HYDRAULIC EXCAVATOR



XL 3200

SPECIFICATIONS

Upperstructure Engine

Deere 4045T diesel, turbocharged, liquid cooled, 4 cycle, 4 cylinder, 276 cid (4.5 L) 4.19" bore x 5.00" stroke (106 mm x 127 mm) 17.0:1 compression ratio.

114 hp (85 kW) gross at 2200 rpm, 108 hp (81 kW) net at 2200 rpm. 329 ft.-lb. (446 Nm) gross torque at 1500 rpm.

Altitude capability: 10,000' (3048m). Derate 4% per 1,000' (305m) above 10,000' (3048m).

Maximum slope: 45°

12 volt starter, 105 amp alternator, one SAE #C31-S 810 CCA battery, two-stage dry type air cleaner with centrifugal precleaner and safety element. Evacuator valve and service indicator, spin-on oil filter, spin-on fuel filter/water separator.

Fuel tank capacity: 67 gallons (253L).

Hydraulic System

PUMPS

One load-sensing, axial piston pump; oil flow 0-75 GPM (0-283 L/min).

SYSTEM MONITOR

Electronic monitor in cab indicates low hydraulic fluid level, high hydraulic fluid temperature, and condition of hydraulic suction and return filters.

SYSTEM SPECIFICATIONS

Four double acting cylinders

- 2 boom hoist: 4.25" ID, 3.0" rod (108mm x 76mm), 23.4" (594mm) stroke.
- 1 tool: 4.75" ID, 3.0" rod (121mm x 76mm), 18.9" (480mm) stroke.
- 1 telescope: 3.5" ID, 2.559" rod (89mm x 65mm), 11' (3.34 m) stroke.

Four hydraulic motors
Swing, 51Hp (38 kW); tilt, 18 Hp (13kW); two crawler drives, 93 Hp (69 kW) each.

Operating pressures:

Hoist	4,500 psi	(31,034 kPa)
Tilt	2,050 psi	(14,138 kPa)
Swing	3,300 psi	(22,759 kPa)
Tool	4,500 psi	(31,034 kPa)
Telescope	4,500 psi	(31,034 kPa)
Crawler	4,800 psi	(33,103 kPa)
Pilot System	500 psi	(3,448 kPa)

Oil Capacity
Reservoir 35 gallons (133 L), system 50 gallons (189 L). Pressurized reservoir with visual oil level gauges.

Filtration System
10 micron return filter with magnet and 100 mesh suction strainer in reservoir.

Fin and tube-type oil cooler with thermal by-pass and relief valves.

Pressure-compensated, load-sensing valves with circuit reliefs in all circuits.

Tractor type crawler with triple grouser heavy-duty pads.

Sealed track links, lubricated and sealed idlers and rollers, hydraulic track tension adjustment, track guides, motor and hose guards, front and rear tow eyes.

Track length:
11' 8" (3.5m)
Track pads:
19.7" (500mm) or 23.6" (600mm)
Crawler width:
8' 2" (2.5m) w/19.7" (500mm) pads
8' 6" (2.6m) w/23.6" (600mm) pads
Ground clearance:
18" (457mm)

Upperstructure Cab

All-weather cab with tinted safety glass windows, skylight, acoustical lining, four-way adjustable operator's seat, filtered fresh air heater and defroster. Front window slides to overhead storage. Rear view mirrors on right and left sides of the machine.

Controls

Two hydraulic joysticks (hoist & bucket, telescope & swing), one rocker switch (tilt) control upperstructure. Hydraulic joysticks are mounted on arm pods that are adjustable for individual operator comfort and convenience.

Two hydraulically damped foot pedals (with handles) control crawler steering, travel and brakes. Toggle switch on arm pod for selection of crawler speed range.

Joysticks are self-centering; when the controls are released, power for movement disengages and swing, tilt and crawler brakes set automatically.

Engine Controls and Instrumentation
Key operated ignition/starter switch, throttle, hour meter and air cleaner condition indicator. Electronic monitor indicates fuel level, low battery charge, coolant level, hydraulic oil level, lube oil pressure, high coolant temperature, and engine rpm. Fuel saving auto idle feature sends engine rpm to idle when control circuits are in neutral for seven seconds.

Swing

Priority swing circuit with axial piston motor. Planetary transmission.

Swing Speed: 9.5 rpm.

Swing Brake
Automatic spring-set/hydraulic release wet disc parking brake. Dynamic braking is provided by the hydraulic system.

Crawler Drive

Dual range, high torque piston motor powers each track. Three-stage planetary drive with integral speed limiting valve and automatic spring-set/hydraulic release wet disc parking brake.

Travel Speed on flat, level surface:
High Speed: 3.3 mph (5.3 km/h)
Low Speed: 1.9 mph (3.1 km/h)
Automatic two-speed control shifts crawler drive into low speed under difficult travel conditions. Manual override switch for loading the machine for transport.

Gradeability
100%, limited by engine lubrication requirements.

Drawbar Pull
29,420 lb (131kN)

Individual Track Control
Tracks counter-rotate to pivot machine about the swing centerline.
Electronically operated travel alarm signals crawler movement in either direction.

Function Forces

Rated Boom Force:
20,150 lb (90kN)

Rated Bucket Breakout Force:
17,670 lb (79kN)

Weight

Approximate working weight with 36" (914mm) excavating bucket, fuel tank half full, and no operator:

Pad Size	Weight	Bearing Pressure
19.7" 500mm	34,170 lb (15,500 kg)	7.2 psi (49.6kPa)
23.6" 600mm	34,660 lb (15,720 kg)	6.1 psi (42 kPa)

GRADALL XL 3200 Crawler Excavator Rated Lift Capacity Over End or Side: Lb (Kg)

LOAD POINT HEIGHT		LOAD RADIUS				
		MINIMUM RADIUS	10' (3m)	15' (4.6m)	20' (6.1m)	MAXIMUM RADIUS
Above Ground Level	15' (4.6m)	7800 @ 14' 7" (3540 @ 4.4m)		6340 (2875)	4370 (1985)	3730 @ 22' 3" (1690 @ 6.8m)
	10' (3m)	9565 @ 12' 7" (4340 @ 3.8m)		7540 (3420)	4965 (2250)	3725 @ 23' 11" (1690 @ 7.3m)
	Boom Level 7'9" (2.4m)	9390 @ 13' 3" (4260 @ 4.0m)		7875 (3570)	5130 (2325)	3740 @ 24' 3" (1695 @ 7.4m)
	5' (1.5m)	9275 @ 13' 5" (4205 @ 4.1m)		7970 (3615)	5210 (2365)	3770 @ 23' 4" (1710 @ 7.4m)
At Ground Level		8970 @ 12' 2" (4070 @ 3.7m)		7215 (3275)	4975 (2255)	3845 @ 23' 8" (1745 @ 7.2m)
Below Ground Level	5' (1.5m)	6125 @ 7' 7" (2780 @ 2.3m)	6480 (3100)	5780 (2620)	4360 (1980)	3900 @ 21' 10" (1770 @ 6.7m)
	10' (3m)	3970 @ 8' 10" (1800 @ 2.7m)	4340 (1970)	4350 (1975)		3850 @ 18' 5" (1745 @ 5.6m)

NOTE: The above loads are in compliance with SAE Standard J1097 NOV88. They do not exceed 87% of hydraulic lifting capacity or 75% of tipping capacity.

All loads shown are limited by hydraulic lift capacity rather than stability.

The rated lift capacity is based on the machine being equipped with 5500 lb (2495 kg) counter-weight, standard boom , 23.6" (600mm) or 19.7" (500mm) tracks and no bucket. Adjust the listed rated capacities according to each bucket as follows:

8035-6004 60" (1.5m) ditching, subtract 757 lb (343Kg)
8035-6014 24" (610mm) excavating, subtract 579 lb (263 Kg)
8035-6006 30" (762mm) excavating, subtract 639 lb (290Kg)
8035-6002 36" (914mm) excavating, subtract 696 lb (316Kg)
8035-6003 30" (762mm) pavement removal, subtract 992 lb (451Kg)

NOTE: Bucket adjustment values are 87% of the actual bucket weights.

The load point is located on the bucket pivot point, including loads listed for maximum radius.

Do not attempt to lift or hold any load greater than these rated values at specified load radii and heights. The weight of slings and any auxiliary lifting devices must be deducted from the rated load to determine the net load that may be lifted.

NOTE: All rated loads are based on the machine being stationary and level on a firm supporting surface. For safe working loads, the user is expected to make due allowance for his particular job conditions, such as soft or uneven ground, out of level conditions, side loads, hazardous conditions, experience of personnel, etc. The operator and other personnel should fully acquaint themselves with the Operator's Manual furnished by the manufacturer before operating this machine, and rules for safe operation of equipment should be adhered to at all times.

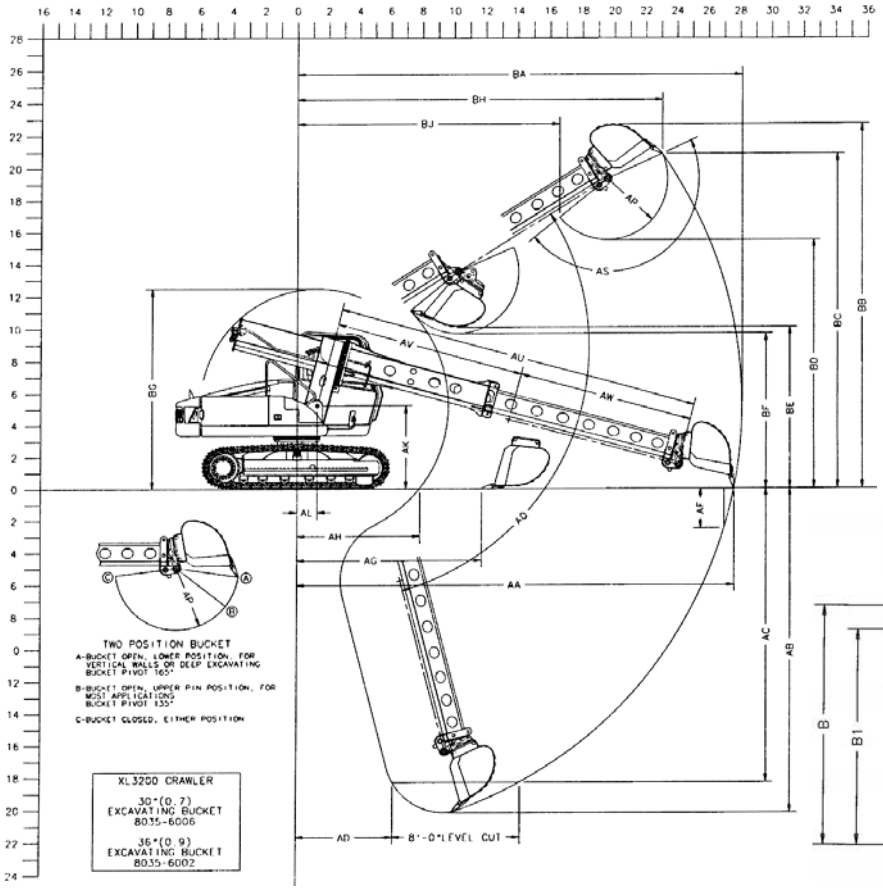

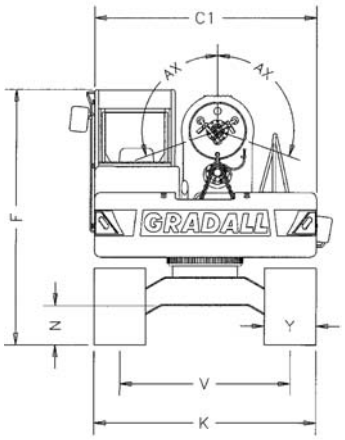

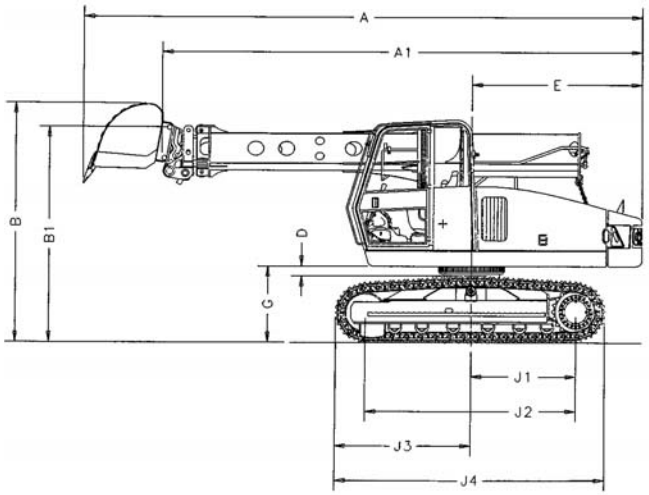

Dimensions

Shown with 8035-6002 36" (914mm) excavating bucket

- **A** Overall length with bucket: 24'6" (7.5)
- **A1** Overall length without bucket: 21'1" (6.4)
- **B** Overall height with bucket: 10'6" (3.2)
- **B1** Boom height without bucket: (Travel Position) 9'6" (2.9)
- **C1** Width of upperstructure: 8'6" (2.6)
- **D** Minimum clearance, upperstructure to undercarriage: 5" (127mm)
- **E** Swing clearance, rear of upperstructure: 7'6" (2.3)
- **F** Top of cab to groundline: 9'10" (3.0)
- **G** Clearance, upperstructure to groundline: 3'4" (1.0)
- **J1** Axis of rotation to centerline of drive sprockets: 4'7" (1.4)
- **J2** Nominal distance between centerlines of drive sprockets and idlers: 9'2" (2.8)
- **J3** Axis of rotation to end of track assembly: 5'10" (1.8)
- **J4** Nominal overall length of track assembly: 11'8" (3.5)
- **K** Width of crawler (Standard): 8'6" (2.6)
  Width of crawler (Optional): 8'2" (2.5)
- **N** Ground clearance (per SAE J1234): 1' 6" (457mm)
- **V** Track gage, roller centerline to roller centerline: 6'6" (2.0)
- **Y** Width of crawler track assembly (Standard): 23.6" (600mm)
  Width of crawler track assembly (Optional): 19.7" (500mm)
- **AA** Maximum radius at groundline (165° pivot): 27'7" (8.4)
- **AB** Maximum digging depth (165° pivot): 20'2" (6.1)
- **AC** Maximum depth for 8' level cut: 18'4" (5.6)
- **AD** Minimum radius for 8' level cut at depth "AC": 6'2" (1.9)
- **AF** Maximum depth of vertical wall which can be excavated: 2'6" (762mm)
- **AG** Minimum level cut radius with bucket flat on groundline: 11'9" (3.6)
- **AH** Minimum radius at groundline: 7'10" (2.4)
- **AK** Boom pivot to groundline: 5'3" (1.6)
- **AL** Boom pivot to axis of rotation: 1'3" (381mm)
- **AP** Bucket tooth radius: 3'10" (1.2)
- **AQ** Boom pivot angle: 32° Up and 75° Down
- **AS** Bucket pivot angle: 135° & 165°
- **AU** Maximum telescoping boom length (boom pivot to bucket pivot): 23'0" (7.0)
- **AV** Minimum telescoping boom length (boom pivot to bucket pivot): 12'0" (3.6)
- **AW** Telescoping boom travel: 11'0" (3.4)
- **AX** Bucket tilt angle (both sides of center): 110°
- **BA** Maximum radius of working equipment (165° pivot): 28'1" (8.5)
- **BB** Maximum height of working equipment: 22'9" (6.9)
- **BC** Maximum bucket tooth height: 20'11" (6.4)
- **BD** Minimum clearance of bucket teeth with bucket pivot at maximum height: 15'6" (4.7)
- **BE** Minimum clearance of fully curled bucket at maximum boom height (165° pivot): 10'1" (3.1)
- **BF** Minimum clearance of bucket teeth at maximum boom height: 9'8" (3.0)
- **BG** Maximum height of working equipment with bucket below groundline: 12'6" (3.8)
- **BH** Radius of bucket teeth at maximum height (165° pivot): 23'0" (7.0)
- **BJ** Minimum radius of bucket teeth at maximum bucket pivot height (165° pivot): 16'7" (5.0)

Transport dimensions without attachment
Length: 21' 1" (6.4)
Height: 9' 10" (3.0)
Width: 8' 6" (2.6)

Metric units are meters (m) unless noted

Machines shown may have optional equipment

Optional Equipment

Work lights: 2 spotlights on boom cradle, 3 floodlights on cab, 2 floodlights on left front shrouding.

Windshield washer and wiper.

Vandalism protection kit: Lexan cab windows, locking reservoir cap and sight gauge cover; locking engine hood, fuel cap and battery box.

Spark arrestor.

Revolving beacon.

Cold start package for engine: includes ether start kit and additional battery.

Air conditioning.

Inside hose trough with additional hosing and piping for pneumatic or hydraulic powered attachments.

McDowell Since 1968

2018 Kingsway Blvd.
Sudbury, Ontario, Canada P3B 4J8
Tel: +1 (705) 566-8190
www.bmcdowell.com
sales@bmcdowell.com

It is Gradall Policy to continually improve its products. Therefore, designs, materials and specifications are subject to change without notice and without incurring any liability on units already sold. Units pictured are equipped with optional equipment. See applicable specifications and price lists for optional equipment.

GRADALL®

406 Mill Ave. SW, New Philadelphia, Ohio 44663
Phone: 330-339-2211 Fax: 330-339-8468
www.gradall.com

ALAMO GROUP

Certified ISO 9001

Form No. 19905 2/06
Printed in USA

Attachments

Buckets fabricated of steel plate, with high strength, low alloy cutting edges and wear strips. Standard attachments available for wide range of applications. Capacities shown are in heaped cu. yd.

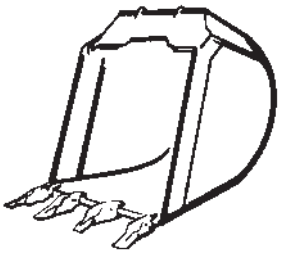

	Cu. yd.	m^3
8035-6014 24″ (610mm) Excavating bucket	.38	.29
8035-6006 30″ (762mm) Excavating bucket	.57	.43
8035-6002 36″ (914mm) Excavating bucket	.68	.52

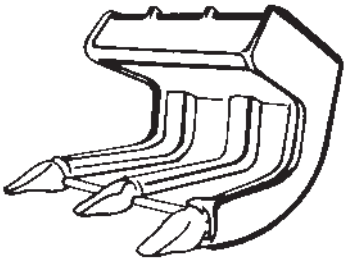

8035-6003 30″ (760mm)
Pavement removal bucket

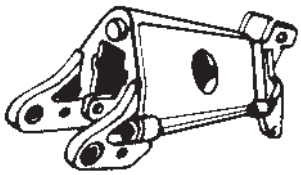

8035-5001 4′ (1.2m)
Boom extension

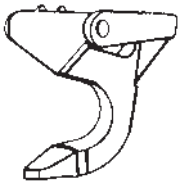

8035-6016 Single-tooth ripper

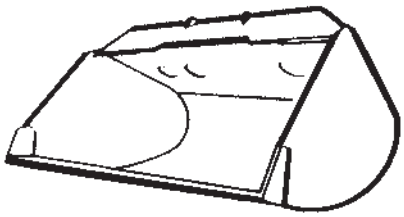

	Cu. yd.	m^3
8035-6004 60″ (1.5m) Constant radius ditching bucket	.80	.61

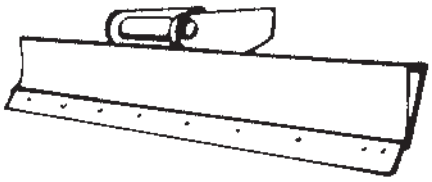

8035-6015 8′ (2.4m) Grading blade with bolt on edge

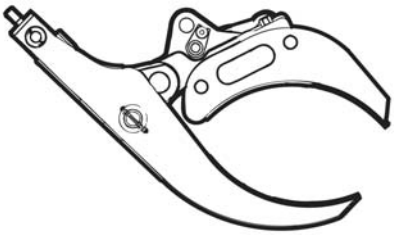

8035-5003
Fixed thumb grapple

TWO POSITION BUCKET

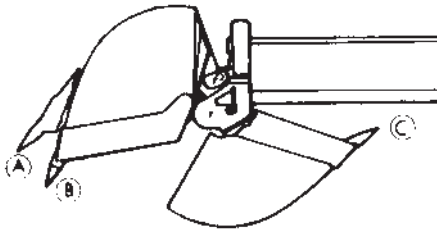

A: Bucket open, lower pin position, for vertical walls or deep excavating. Bucket pivot 165°.

B: Bucket open, upper pin position, for most applications. Bucket pivot 135°.

C: Bucket closed, either pin position.