HIAB S-CLX 100



HIAB S-CLX 100 BASIC DATA

Technical data		S-CLX 100
M_{dyn}	kNm	99
Lifting capacity	kNm	75
Lifting capacity	tm	7.7
Lifting capacity (ADC)	kNm	-
Lifting capacity (ADC)	tm	-
Outreach - lifting capacity, standard	m-kg	1.9 - 3,900 3 - 2,550 4.2 - 1,820 5.5 - 1,400
Outreach - lifting capacity, manual extensions	m-kg	
Hydraulic outreach, standard	m	5.7
Hydraulic boom extension	m	2.6 m
Outreach, manual extensions	m	-
Lifting height above installation level, hydr/man	m	7.0 / 0.0
Rec. oil flow	l/min	30 - 35
Power needed at rec. oil flow V80	kW	-
Power needed at rec. oil flow V91	kW	-
Working pressure	Mpa	28
Oil in tank	l	75 - 100
Tank capacity	l	0 - 120
Slewing angle	°	406
Max slope viable at full capacity	°	6
Slewing torque, gross	kNm	10.7
Slewing speed 80	°/s	15
Slewing speed	°/s	15
Lifting speed at standard hydraulic outreach	m/s	0.9
Height in folded position	mm	1,256
Width in folded position	mm	2,428
Install space required. Rotation area not included	mm	773
Install space required with hose and pipe kit	mm	773
Weight		
Crane in standard version without support legs	kg	1,260
Top seat	kg	-
Frame attachments	kg	30 - 39
Support leg equipment	kg	168 - 178

HIAB S-CLX 100D-2

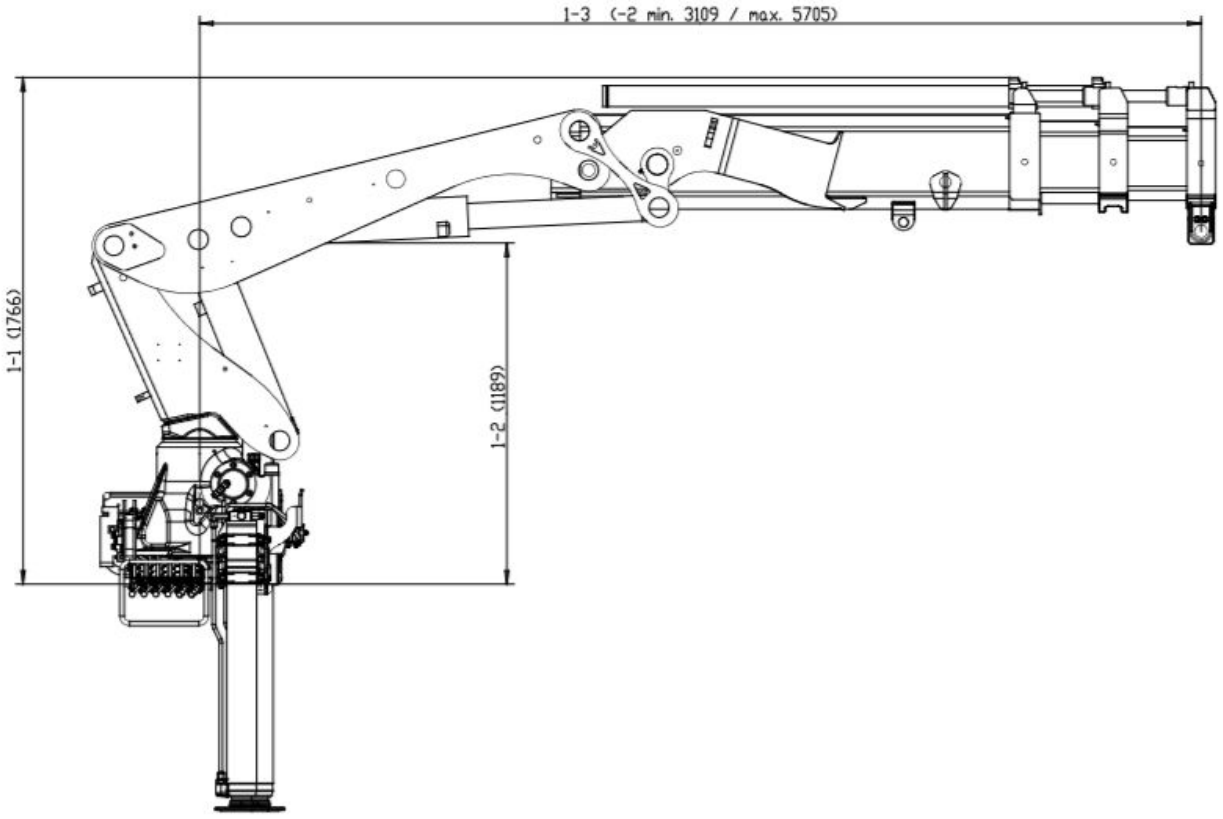

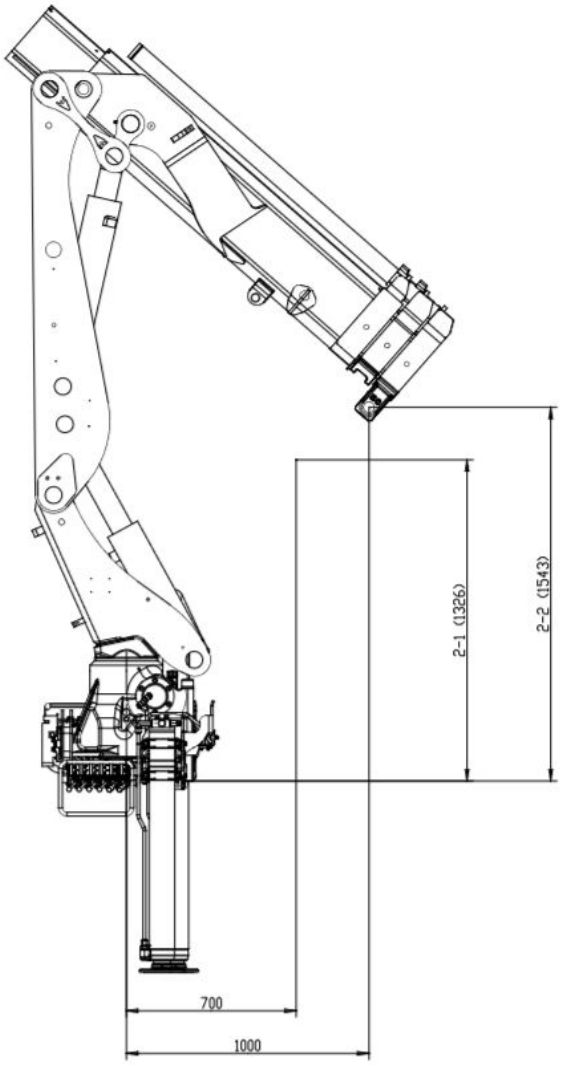
2-1 (1326)
2-2 (1543)
700
1000

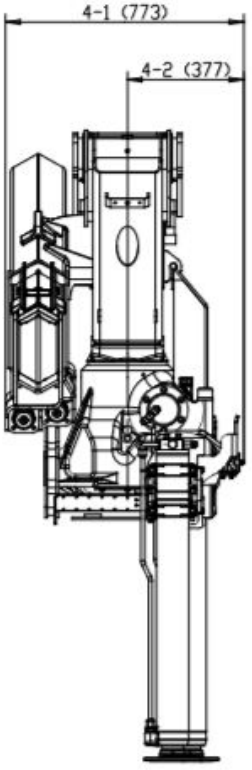
4-1 (773)
4-2 (377)

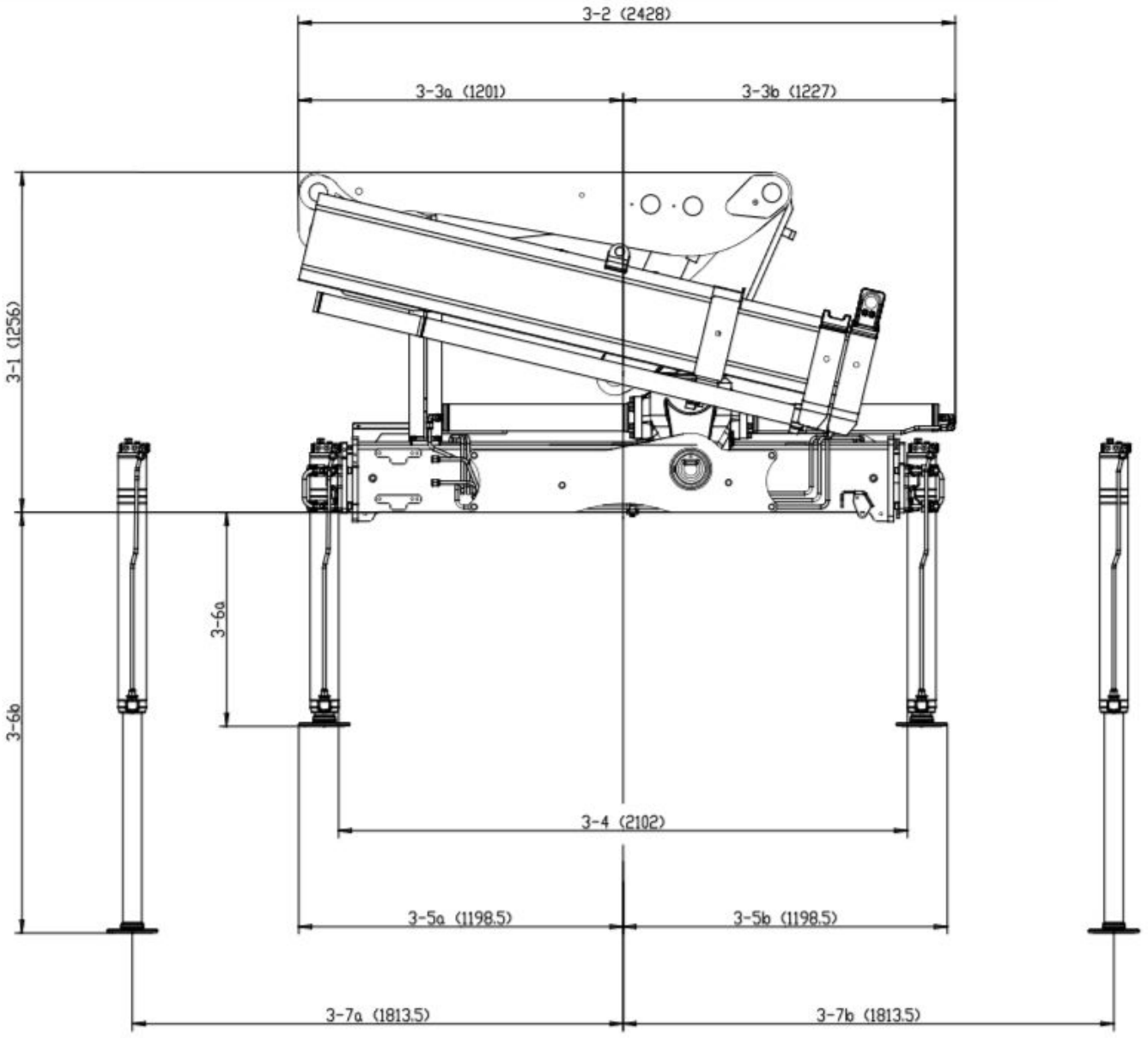

SUPPORT LEG		
	3-6a	3-6b
MEDIUM	685	1341
LONG	790	1553

Capacity plate HIAB S-CLX 100D-2

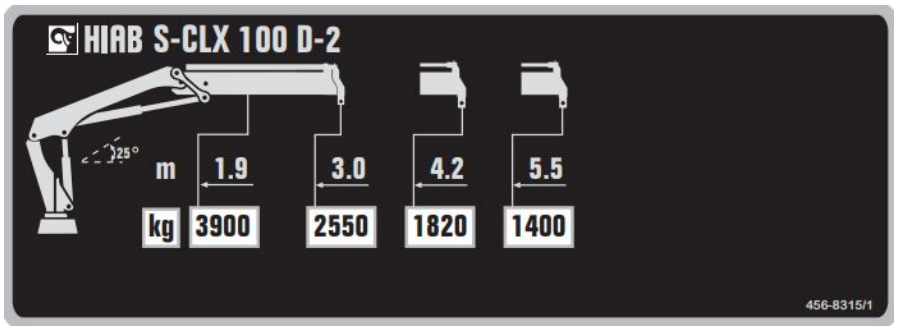

Load diagram HIAB S-CLX 100D-2

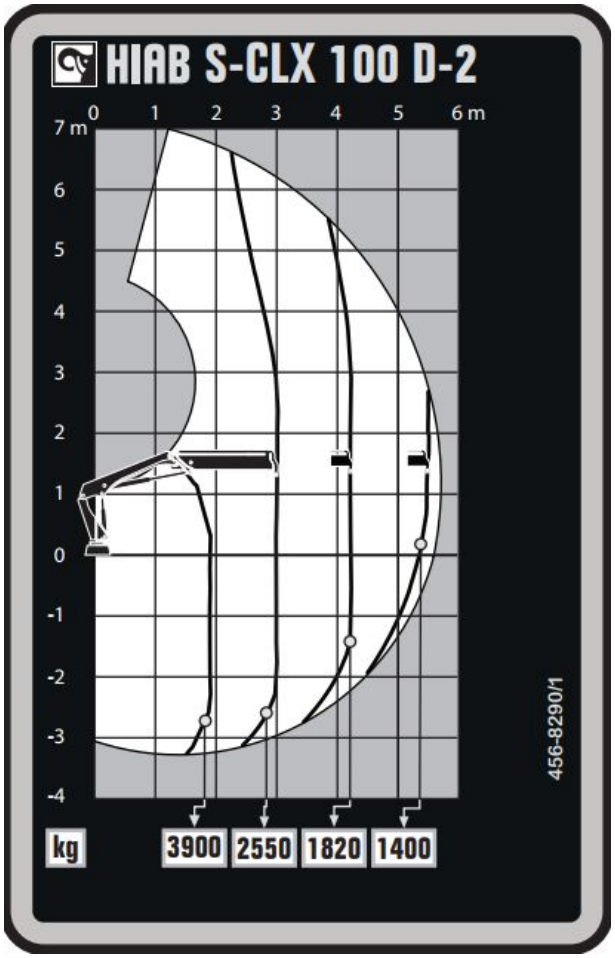



McDowell Since 1968

2018 Kingsway Blvd.
Sudbury, Ontario, Canada P3B 4J8
Tel: +1 (705) 566-8190
www.bmcdowell.com
sales@bmcdowell.com

HIAB