130X4

SAE Net Horsepower: 102 HP (76.4 kW)
Operating Weight: 29,100 lbs. (13 200 kg)
Digging Depth: 18 ft 2 in (5.55 m)

McDowell - Since 1968 -
2018 Kingsway Blvd
Sudbury, Ontario Canada P3B 4J8
+1(705)566-8190
www.bmcdowell.com
sales@bmcdowell.com

SPECIFICATIONS



Link-Belt EXCAVATORS



Performance, Productivity and Reliabilty Come Standard

Link-Belt 130 X4 Series excavators are built to exceed your expectations. We redesigned the control spools and incorporated spool stroke control (SSC) functions into the hydraulic system to reduce pressure loss and distribute hydraulic oil more smoothly, reducing cycle times by 2%. Expect more power and fuel efficiency, thanks to an innovative Final Tier 4 engine that delivers up to 8% improved fuel consumption, **without a Diesel Particulate Filter (DPF) to maintain or replace!** Settle in to the roomiest, most accommodating cab in its class, with more legroom and a new high-back, heated seat for shift-long comfort. Daily maintenance is a snap, with ground-level access to all service points, easily opened by hand.



Innovation and Attention to Details at Every Level



- Three power modes (Speed Priority, Heavy and Applied Power) let you **choose the best blend of power, precision and fuel savings** for the work you're doing



- EPA Final Tier 4 engine is **fuel efficient without sacrificing power**



- **No DPF** to ever worry about!
- 2-3% DEF (Diesel Exhaust Fluid) consumption rate relative to fuel consumption, combined with one of the largest DEF tank capacities lets you work long hours between refills



- Ground level access to routine service points lets you **cut daily maintenance down to just minutes**



- Quiet, pressurized cab offers **excellent visibility and comfortable, best-in-class seating**
- Enough floor space to **accommodate the largest of work boots**, with cup holders and roomy storage compartments for cell phones, snacks and other personal items



- Dual cab working lights are standard, or choose optional LEDs for **added visibility**

- Ergonomic joysticks **fit your hand perfectly**





- 7" high-definition LCD monitor **keeps you connected to your machine and work environment**
- RemoteCARE® telematics **keeps a watchful eye** on performance, maintenance intervals and theft deterrence



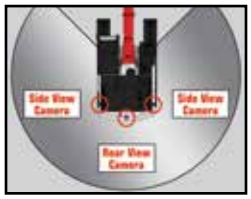

- Full-time, rear-view camera display is standard; add the WAVES™ option for a **seamless 270° view around the machine**



- Structural improvements to the boom and arm **reduce stress and provide greater durability**



- Robust undercarriage features **larger track rollers and thicker plating for longer life**
- Unique side-frame design **reduces dirt accumulation** and is **easier to clean**

**All improvements and percentage increases are in reference to Link-Belt X3 Series excavators, unless otherwise stated*



Greater digging power and increased lift capacities are the result of our innovative Spool Stroke Control (SSC) system, which reduces pressure loss and distributes hydraulic oil more smoothly. Pilot pressure sensors detect the type of work being done-such as digging or leveling-and then relays that data to proportional solenoid valves that quickly determine where optimal hydraulic pressures should be directed for that operation.

Two electronically-controlled Kawasaki variable-displacement axial-piston pumps and one Kawasaki gear pump assure that hydraulic power is delivered precisely when and where it's needed. At the same time, hydraulic flows in noncritical areas of the system are reduced.

The result is better breakout force, more lifting strength and faster machine response. You'll dig, swing and dump quicker than ever before...with 2% faster cycle times and improved fuel efficiency!

- Proprietary hydraulic system
- Electronically-controlled pumps for improved cycle times, quicker response and more efficient machine operation
- Move more dirt per gallon of fuel



Quick and Responsive to Take On Tough Challenges



The X4 Series features innovative EPA-certified Final Tier 4 engines from Isuzu that strike the ultimate balance between power, productivity and fuel efficiency. You'll experience up to 8% improved fuel efficiency, without having to worry about costly diesel particulate filters (DPF) to maintain or replace. Three engine modes provide reliable power and control for any machine application. Choose Speed Priority (SP mode) to get jobs done quickly, Heavy (H mode) for the best blend of power and fuel savings or Applied Power (A mode), with 13 different RPM settings for precise control of heavy lifting, fine grading or leveling work.

- EPA-certified Tier 4 Final
- No DPF to maintain
- Up to 8% improved fuel consumption
- 500-hr. fuel filters service intervals
- 10 diesel tank refills per 1 diesel exhaust fluid (DEF) refill
- 2-3% DEF consumption rate relative to fuel consumption
- Two-stage DEF anti-freeze system for protection in harsh operating conditions
- 30 hrs. between SCR regenerations, only takes 5-8 minutes to complete!
- VGT (Variable Geometry Turbocharger)





Power and Efficiency Without Compromise

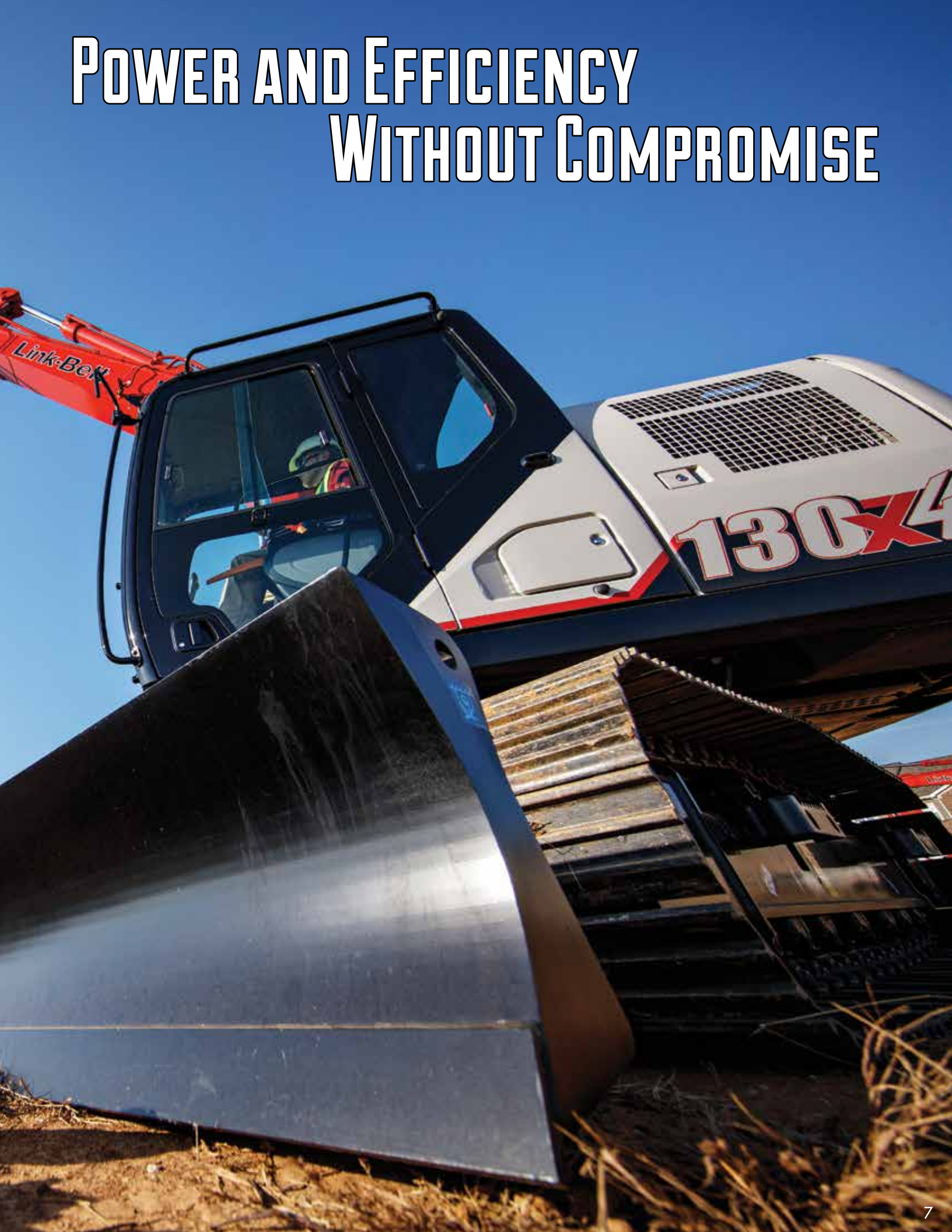



The X4 Series offers the most advanced and roomiest cab in its class. Comfortable, automotive-grade high-back seat with head rest provides superior lumbar back support. With a longer and wider seating surface, it reclines to a 155° maximum reclining angle to create a relaxed environment during breaks. Air-suspension seat is standard with tilting adjustment and seat heaters available as options.

The cab layout also includes ergonomically-designed arm rests that move with console, maintaining a constant distance between joysticks and arm rests no matter how the seat is adjusted.

- Quiet, pressurized cab
- Joysticks with easy-to-hold grip and switches
- Convenient 'radio mute' and one touch wiper switch
- Optional proportional joysticks w/auxiliary hydraulics control
- Cup holder and storage areas for cell phones and other small items
- Dual halogen cab lights standard
- Full time rear camera display
- Optional RH & LH side cameras
- ROPS and FOPS Level 1 certified, optional FOPS Level 2 head guard available
- Optional LED lights use less energy and are 3X brighter!
- Optional retractable rear window shade
- Optional front sun visor
- Improved radio with USB port and Bluetooth for hands-free communication.



High-Definition LCD monitor has a full-color 7" display that rivals the resolution found in luxury automobiles. Controls are easy to read and easy to use. The rear-view camera activates automatically whenever the machine is started, and sight guidelines have been added for increased safety.

- Anti-glare coating on screen
- Track up to 14 service maintenance reminders
- System/machine warning messages
- Easy-to-use auto idle and auto shutdown feature
- Select and set up attachments: 5 presets for breakers; 5 presets for crushers
- In-cab flow & pressure controls for auxiliary hydraulics
- Anti-theft system
- Auto-adjusts for time and calendar
- 24 languages available
- Ability to view fuel consumption

270° WAVES™

WIDE-ANGLE VISUAL ENHANCEMENT SYSTEM

For the ultimate in visibility, X4 machines can be fitted with the Wide Angle Visual Enhancement System - or WAVES for short. Using three closed-circuit cameras, this optional viewing system provides an unbelievable 270° visual coverage around the machine, eliminating any potential blind spots from the operator's line of sight. WAVES images can be displayed on the standard X4 monitor.

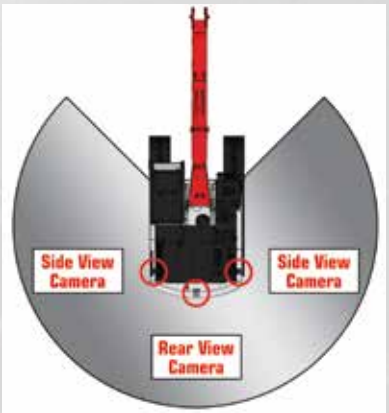



Get Working Fast With Easy Access to Service Points

Maintenance is a snap, with ground level access to all routine service points, including batteries, fuel filters, engine oil filter, dual-element air filter and cab fresh air filter.

- Radiator screens are easy to remove and clean from ground level...no tools needed!
- A/C Condenser tilts for easy cleaning and maintenance
- Easy battery compartment access; 2 hand-turn knobs
- Improved battery disconnect switch with no keys needed
- Convenient ground-level sample ports in pump compartment
- Green drain plug and hose
- More data collection points
- Automatic door locking mechanism on side door
- Quick and easy access to grease all attachment pivot points
- Grease cylinder track adjusters make adjusting track tension a breeze
- New undercarriage side frame design enables easier cleaning
- In-cab reminders track 14 different maintenance procedures

RemoteCARE® TELEMATICS WITH NO SUBSCRIPTION FEE

RemoteCARE® lets you remotely monitor and track machine location, operational performance, working status and periodic maintenance requirements - now at no cost to you. It tracks and records both routine and major service intervals for your machines, giving you more flexibility and control when scheduling maintenance procedures. It also lets you be more proactive if potential failure conditions arise; whenever a diagnostic trouble code (DTC) is detected, a warning message appears on the machine display, and an e-mail alert is automatically sent to you. RemoteCARE also assists in theft prevention by offering 24/7 surveillance and geofencing capabilities.

FREE Subscription Includes:

- ✓ 24/7 Remote Monitoring and Security
- ✓ Machine Location
- ✓ Geo-fence & Curfew Range
- ✓ Actual Fuel Consumption
- ✓ Fuel Levels
- ✓ Hour Meter Reading
- ✓ Radiator Water Temperature
- ✓ Machine Working Time/Idle Time
- ✓ Attachment Working Hours
- ✓ Working Modes
- ✓ Service Maintenance Reminders
- ✓ Service Warnings



RemoteCARE® App

Manage your Link-Belt equipment with this user friendly telematics management tool with GPS technology. The RemoteCARE App provides timely and reliable machine utilization – as well as assisting in DTC notifications. With RemoteCARE you will be able to remotely monitor and track your machine's location, operational performance, and working status. Contact your local Link-Belt dealer for questions.

App features include...

- Machine location
- Fuel consumption
- Utilization report
- Fuel efficiency
- Analytical snapshots
- Idle rate
- DTC notification history
- Favorite list

Download Apple or Android app at **lbxco.com/apps** for phone and tablet.



Built Strong to Handle Anything

X4 machines are more rugged and durable, with robust structural improvements to the boom & arm structures, along with improvements to lower frame and travel components.



Boom & Arm

- Improved boss shapes reduce stress on boom and arm pin
- Cast boom tip for increased reliability



Lowers

- Thicker travel motor case - 19% increase
- 13% more stroke recoil spring
- Optimized position of carrier roller
- Unique side-frame design reduces dirt accumulation and is easier to clean.



Customer Support is Just a Call Away

A network of Link-Belt Excavator dealers across the U.S. and Canada is waiting to serve you. Expect fast and dependable service, backed by 24/7 access to parts.

Exceptional Warranty Coverage

All X4 excavators purchased after July 1, 2020 are backed by a 5-year/5,000- hour Full Machine Warranty, 5-year/10,000- hour Structural Warranty, along with participation in the X4 Fluid Analysis Program for the duration of the warranty (free with all X4 machines). Extended warranty coverage packages are also available.

Contact your dealer for complete details.



SPECIFICATIONS

Engine

Isuzu AR-4JJ1X Final Tier 4 turbocharged diesel engine with electronic control (ECM) and high pressure common-rail fuel injection, 4-cylinder, water-cooled, Exhaust Gas Recirculation (EGR), Intercooler, Variable-Geometry Turbocharger (VGT), Diesel Oxidation Catalyst (DOC) and Selective Catalytic Reduction (SCR) system with Dosing Control Module and heated DEF lines and tank. Electronic fuel pump and priming, Fuel cooler, Auto-idle start, Auto warm-up, EPF engine protection, dual-stage fuel filtration, remote oil filter, engine oil sample port, green plug oil drain, double element air filter.

SAE J 1349 net horsepower	102 hp (76.4 kW) @ 2,000 rpm
Displacement	183 cu in (2.9 L)
Maximum Torque	257 lbf-ft (349 Nm) @ 1,800 rpm
Starter	24V-4.0kW
Alternator	50 amp
Battery	(2) 12-volt 72 amp hours

Cab and Controls

ROPS and FOPS Level 1 certified with automatic climate control A/C and heat with defroster, 7" LCD Hi-Definition color monitor with full time rear view camera display, fuel efficiency gauge, low-effort joysticks are pre-wired for auxiliary hydraulics, dual cab lights, control pattern changer, safety glass windows, sunroof with sunshade, shockless cab suspension with four fluid cab mounts, SCM High-Back reclining air-suspension seat, sliding 4-position tilting control consoles, Bluetooth technology, AM/FM sound system with USB and MP3 auxiliary input jack, digital clock, dome light, seat belt, coat hook, cup holder, storage compartments, floor mat, footrests, ashtray, 24V cigarette lighter, 12V outlet, travel alarm, handrails, mirrors, side-entry cab filter, spare parts kit.

Three selectable work modes, RemoteCARE Telematics GPS system, anti-theft password protection system, onboard self-diagnostic system with memory and service interval reminders, auto idling system, one-touch decelerator, auto-idle engine shutdown, auto-power boost, neutral safety start, gate-lock safety shutoff.

Sound Level - Cab Interior	67.6 dB(A)
Sound Level - Exterior	97.3 dB(A)

Hydraulic System

Open-center system, two variable-displacement electronically controlled axial-piston pumps and one gear pump for pilot controls, main control valve with one 4-spool section and one 5-spool section with auxiliary spool: stackable, Auxiliary Control System, oil cooler, Auto-Power boost, anti-drift valves, 6 micron return filter, firewall, hydraulic oil sample port.

Hydraulic Pumps

Pump Output	2 x 34.1 gpm (129 L/min)
Pilot Pump Maximum Flow	5.3 gpm (20 L/min)

Relief Valve Settings

Boom/Arm/Bucket	4,970 psi (34.3 MPa)
in Power Boost	5,260 psi (36.3 MPa)
Swing Circuit	4,050 psi (27.9 MPa)
Travel Circuit	4,970 psi (34.3 MPa)

Hydraulic Cylinders

	number of cylinders - bore x rod x stroke
Boom	2 - 4.1" x 2.8" x 37.8" (105 mm x 70 mm x 961 mm)
Arm	1 - 4.5" x 3.1" x 43.6" (115 mm x 80 mm x 1,108 mm)
Bucket	3.7" x 2.6" x 34.7" (95 mm x 65 mm x 881 mm)

Swing

Planetary reduction powered by axial-piston motor, Internal ring gear with grease cavity for swing pinion, Swing bearing is single-row, shear type ball bearing, Mechanical disc swing brake, Auto-power swing.

Swing Speed	14.3 rpm
Tail Swing	7' 1"(2.17 m)
Swing Torque	24,400 lbf-ft (33.0 kNm)

Undercarriage

X Pattern carbody with 12' 4" (3.70 m) LC long undercarriage by 6' 6" (1.99 m) track gauge, Sealed and strutted track chain with track guide, Sealed rollers and idlers, Two-speed independent hydrostatic travel with compact planetary final drive, Disc type brakes, Adjustable track tension, Carbody belly pan.

Carrier Rollers	
Regular Undercarriage	1 per Side
Long Undercarriage	2 per Side
Track Rollers	7 per Side
Track Link Pitch	6.75"(171.5 mm)
Shoes	
Regular Undercarriage	43 per Side
Long Undercarriage	46 per Side
Shoe Width	23.6"(600 mm)
Ground Pressure	
Regular Undercarriage with blade	5.37 psi (0.037 MPa)
Long Undercarriage	4.79 psi (0.033 MPa)

Travel System

Two-speed independent hydrostatic travel with compact axial-piston motors, Hydraulic motor powered output shaft coupled to a planetary reduction drive and track sprocket, All hydraulic components mounted within the width of side frame, Automatic downshift for high torque to overcome obstacles, Spring-applied hydraulic release parking brake built into each motor, Travel motors equipped with counterbalance valve to prevent over-speeding down an incline.

Travel Speeds	2.1 - 3.5 mph (3.4 - 5.6 km/h)
Drawbar Pull	26,100 lbf (116 kN)
Gradeability	70% (35°)

Attachment

Boom ..... 15' 2" (4.63 m)

Available Arms	Digging Force
• 8' 2" (2.50 m)	13,900 lbf (62 kN)
with Auto Power Boost	14,800 lbf (66 kN)
• 9' 11" (3.01 m)	12,600 lbf (56 kN)
with Auto Power Boost	13,500 lbf (60 kN)
• 6' 11" (2.11 m)	15,700 lbf (70 kN)
with Auto Power Boost	16,600 lbf (74 kN)
• Bucket Digging Force	20,200 lbf (90 kN)
with Auto Power Boost	21,400 lbf (95 kN)

Lubricant & Coolant Capacity

Fuel Tank	69 Gallons (260.0 Liters)
Hydraulic System	41 Gallons (157.0 Liters)
Hydraulic Tank	22 Gallons (82.0 Liters)
Final Drive (per side)	0.6 Gallons (2.1 Liters)
Swing Drive	0.6 Gallons (2.2 Liters)
Engine Oil	4.5 Gallons (17.0 Liters)
DEF Tank	20 Gallons (75.0 Liters)
Coolant System	4.7 Gallons (17.7 Liters)

Operating Weight

Working weight with 23.6" (600 mm) shoes, 15' 2" (4.63 m) boom, 8' 2" (2.50 m) arm, 900 lb. (410 kg) bucket, 4,380 lb. (1 990 kg) counterweight ..... 29,100 lbs. (13 200 kg)

Working weight with 23.6" (600 mm) shoes, 15' 2" (4.63 m) boom, 8' 2" (2.50 m) arm, 900 lb. (410 kg) bucket, 4,380 lb. (1 990 kg) counterweight, 1,265 lb. (574 kg) dozer blade ..... 30,500 lbs. (13 800 kg)

Working Range & Travel Dimensions

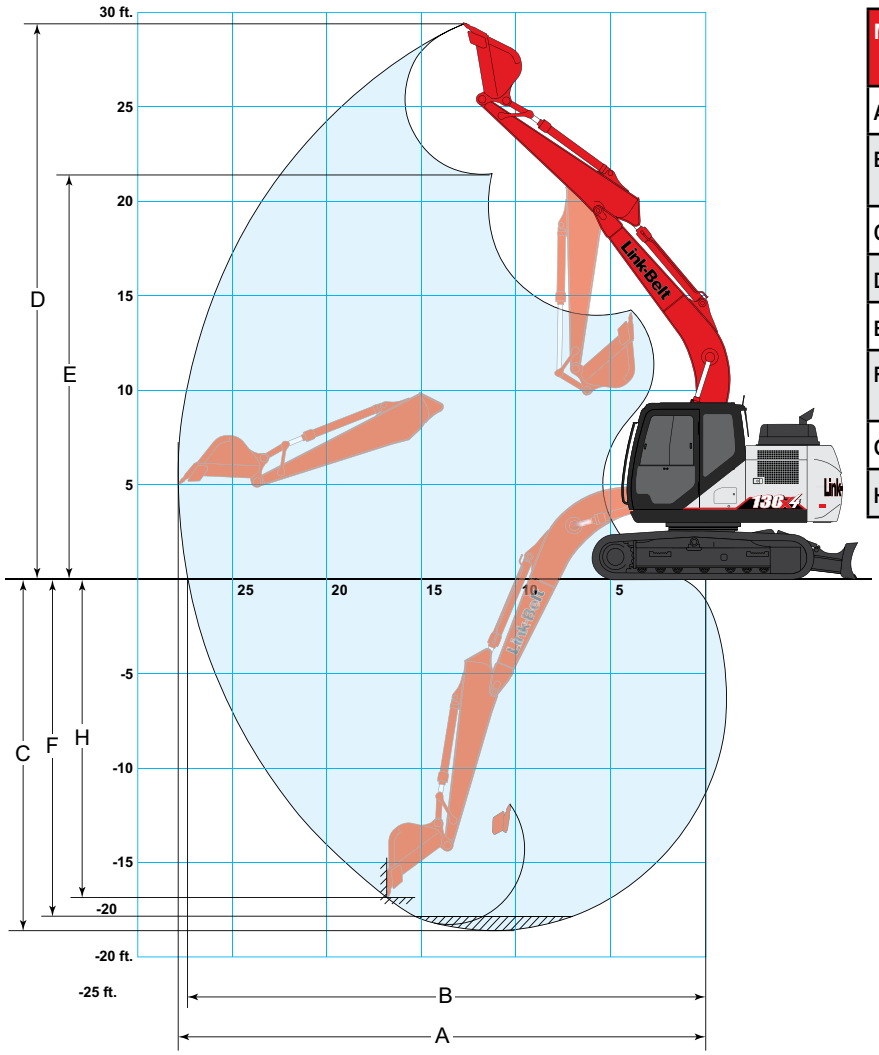

Machine Equipped with 15′ 2″ (4.63 m) Boom	Arm 8′ 2″ (2.50 m)	Arm 9′ 11″ (3.01 m)	Arm 6′ 11″ (2.11 m)
A. Maximum reach	27' 3" (8.31 m)	28' 9" (8.77 m)	26' 1" (7.96 m)
B. Maximum reach @ ground level	26' 10" (8.17 m)	28' 4" (8.64 m)	25' 7" (7.81 m)
C. Maximum dig depth	18' 2" (5.55 m)	19' 10" (6.05 m)	16' 11" (5.16 m)
D. Maximum dig height	28' 9" (8.77 m)	29' 8" (9.05 m)	28' 1" (8.55 m)
E. Maximum dump height	20' 11" (6.39 m)	21' 11" (6.68 m)	20' 3" (6.17 m)
F. Digging depth 8' (2.44 m) level bottom	17' 6" (5.33 m)	19' 3" (5.87 m)	16' 2" (4.92 m)
G. Bucket rotation	178°	178°	178°
H. Maximum vertical wall depth	16' 3" (4.95 m)	17' 7" (5.35 m)	15' 1" (4.60 m)

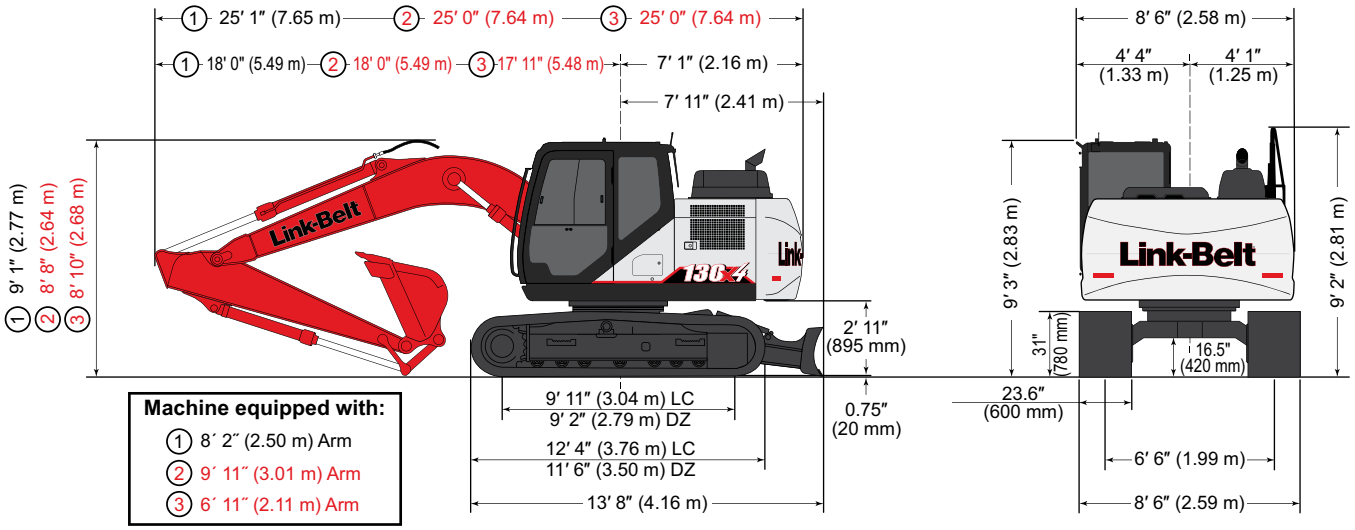

LIFT CAPACITIES

Radius of Load - Regular Undercarriage with Blade Down
8′ 2″ (2.50 m) Arm with 15′ 2″ (4.63 m) Boom and 900 lb. (410 kg) Bucket with Power-Boost Applied

End / Side		5' 0" (1.5 m) End	5' 0" (1.5 m) Side	10' 0" (3.0 m) End	10' 0" (3.0 m) Side	15' 0" (4.5 m) End	15' 0" (4.5 m) Side	20' 0" (6.0 m) End	20' 0" (6.0 m) Side	25' 0" (7.5 m) End	25' 0" (7.5 m) Side	30' 0" (9.0 m) End	30' 0" (9.0 m) Side	Cap at Max. Reach End	Cap at Max. Reach Side
+25' 0"	**lbs**					**4,050***	**4,050***							**3,250***	**3,250***
(7.5 m)	kg					1 840*	1 840*							1 440*	1 440*
+20' 0"	**lbs**							**4,950***	**4,950***					**2,700***	**2,700***
(6.0 m)	kg							2 390*	2 390*					1 220*	1 220*
+15' 0"	**lbs**					**6,400***	**6,400***	**6,100***	**5,250**					**2,550***	**2,550***
(4.5 m)	kg					2 920*	2 920*	2 850*	2 450					1 150*	1 150*
+10' 0"	**lbs**			**11,500***	**11,500***	**8,600***	**8,100***	**7,200***	**5,050**	**4,750***	**3,400**			**2,550***	**2,550***
(3.0 m)	kg			5 290*	5 290*	3 980*	3 750	3 290*	2 350	2 410*	1 590			1 160*	1 160*
+5' 0"	**lbs**			**16,750***	**14,400**	**11,000***	**7,600**	**8,350***	**4,800**	**5,750***	**3,300**			**2,700***	**2,700***
(1.5 m)	kg			7 730*	6 710	5 090*	3 520	3 860*	2 230	2 880*	1 540			1 220*	1 220*
Ground Line	**lbs**	**5,600***	**5,600***	**18,450***	**13,400**	**12,600***	**7,150**	**9,200***	**4,600**	**4,900***	**3,200**			**3,000***	**3,000***
	kg	2 510*	2 510*	7 980*	6 240	5 830*	3 320	4 230*	2 130	2 680*	1 490			1 360*	1 360*
-5' 0"	**lbs**	**11,150***	**11,150***	**20,200***	**13,300**	**12,950***	**6,950**	**9,300***	**4,500**					**3,600***	**3,450**
(1.5 m)	kg	5 020*	5 020*	9 280*	6 200	5 970*	3 230	4 290*	2 090					1 630*	1 570
-10' 0"	**lbs**	**17,700***	**17,700***	**18,500***	**13,500**	**12,150***	**7,050**	**7,850***	**4,600**					**4,900***	**4,400**
(3.0 m)	kg	7 830*	7 830*	8 570*	6 300	5 640*	3 270	3 860*	2 150					2 190*	1 970
-15' 0"	**lbs**			**13,800***	**13,650**	**8,250***	**7,300**							**7,750***	**7,050**
(4.5 m)	kg			6 500*	6 380	4 040*	3 400*							3 520*	3 090

Radius of Load - Regular Undercarriage with Blade Up
8′ 2″ (2.50 m) Arm with 15′ 2″ (4.63 m) Boom and 900 lb. (410 kg) Bucket with Power-Boost Applied

End / Side		5' 0" (1.5 m) End	5' 0" (1.5 m) Side	10' 0" (3.0 m) End	10' 0" (3.0 m) Side	15' 0" (4.5 m) End	15' 0" (4.5 m) Side	20' 0" (6.0 m) End	20' 0" (6.0 m) Side	25' 0" (7.5 m) End	25' 0" (7.5 m) Side	30' 0" (9.0 m) End	30' 0" (9.0 m) Side	Cap at Max. Reach End	Cap at Max. Reach Side
+25' 0"	**lbs**					**4,050***	**4,050***							**3,250***	**3,250***
(7.5 m)	kg					1 840*	1 840*							1 440*	1 440*
+20' 0"	**lbs**							**4,950***	**4,950***					**2,700***	**2,700***
(6.0 m)	kg							2 390*	2 340					1220*	1 220*
+15' 0"	**lbs**					**6,400***	**6,400***	**6,100***	**4,950**					**2,550***	**2,550***
(4.5 m)	kg					2 920*	2 920*	2 850*	2 300					1 150*	1 150*
+10' 0"	**lbs**			**11,500***	**11,500***	**8,600***	**7,600**	**6,250**	**4,750**	**4,250**	**3,150**			**2,550***	**2,550***
(3.0 m)	kg			5 290*	5 290*	3 980*	3 530	2 910	2 200	1 970	1 480			1 160*	1 160*
+5' 0"	**lbs**			**16,750***	**13,300**	**9,550**	**7,050**	**6,000**	**4,500**	**4,100**	**3,050**			**2,700***	**2,700***
(1.5 m)	kg			7 730*	6 180	4 450	3 280	2 780	2 080	1 920	1 430			1 220*	1 220*
Ground Line	**lbs**	**5,600***	**5,600***	**18,000**	**12,350**	**9,100**	**6,650**	**5,750**	**4,250**	**4,050**	**2,950**			**3,000***	**2,850**
	kg	2 510*	2 510*	7 980*	5 740	4 220	3 080	2 680	1 980	1 870	1 380			1 360*	1 290
-5' 0"	**lbs**	**11,150***	**11,150***	**18,000**	**12,250**	**8,850**	**6,450**	**5,650**	**4,150**					**3,600***	**3,200**
(1.5 m)	kg	5 020*	5 020*	8 330	5 700	4 130	2 990	2 630	1 940					1 630*	1 450
-10' 0"	**lbs**	**17,700***	**17,700***	**18,100***	**12,450**	**8,950**	**6,550**	**5,750**	**4,300**					**4,900***	**4,050**
(3.0 m)	kg	7 830*	7 830*	8 440*	5 790	4 170	3 040	2 690	2 000					2 190*	1 830
-15' 0"	**lbs**			**13,800***	**12,750**	**8,250***	**6,800**							**7,750***	**6,550**
(4.5 m)	kg			6 500*	5 930	4 040*	3 160							3 520*	2 870

Notes: Excavator lifting capacities

1. Lifting capacities shown should not be exceeded. Weight of all lifting accessories must be deducted from the above lifting capacities.
2. Lifting capacities are based on machine standing on firm, uniform supporting surface. User must make allowances for job conditions such as soft or uneven ground.
3. Lifting capacities shown do not exceed 75% of minimum tipping loads or 87% of hydraulic capacities. **Capacities marked with an asterisk (*) are limited by hydraulic capacities.**
4. Least stable position is over the side.
5. Operator should be fully acquainted with the Operator's Manual & Operating Safety Booklet, furnished by LBX before operating the machine.
6. Capacities apply only to the machine as originally manufactured and normally equipped by LBX Company, LLC.
7. Lift capacity ratings are based on ISO 10567, "Earthmoving Machinery - Hydraulic Excavators - Lift Capacity."

LIFT CAPACITIES

Radius of Load - Regular Undercarriage with Blade Down
9′ 11″ (3.01 m) Arm with 15′ 2″ (4.63 m) Boom and 900 lb. (410 kg) Bucket with Power-Boost Applied

End / Side		5' 0" (1.5 m) End	5' 0" (1.5 m) Side	10' 0" (3.0 m) End	10' 0" (3.0 m) Side	15' 0" (4.5 m) End	15' 0" (4.5 m) Side	20' 0" (6.0 m) End	20' 0" (6.0 m) Side	25' 0" (7.5 m) End	25' 0" (7.5 m) Side	30' 0" (9.0 m) End	30' 0" (9.0 m) Side	Cap at Max. Reach End	Cap at Max. Reach Side
+25' 0"	**lbs**													**3,100***	**3,100***
(7.5 m)	kg													1 370*	1 370*
+20' 0"	**lbs**							**4,850***	**4,850***					**2,650***	**2,650***
(6.0 m)	kg							2 240*	2 240*					1 200*	1 200*
+15' 0"	**lbs**							**5,750***	**5,350**	**4,150***	**3,550**			**2,550***	**2,550***
(4.5 m)	kg							2 620*	2 470*	2 060*	1 660			1 150*	1 150*
+10' 0"	**lbs**					**7,500***	**7,500***	**6,500***	**5,150**	**5,450***	**3,450**			**2,550***	**2,550***
(3.0 m)	kg					3 450*	3 450*	2 990*	2 400	2 600*	1 620			1 150*	1 150*
+5' 0"	**lbs**			**14,400***	**14,400***	**10,150***	**7,700**	**7,900***	**4,850**	**6,500***	**3,300**			**2,700***	**2,700***
(1.5 m)	kg			6 630*	6 630*	4 700*	3 580	3 640*	2 260	3 040*	1 550			1 210*	1 210*
Ground Line	**lbs**	**5,850***	**5,850***	**18,550***	**13,450**	**12,100***	**7,150**	**8,900***	**4,600**	**6,900***	**3,200**			**2,950***	**2,800**
	kg	2 610*	2 610*	8 570*	6 270	5 590*	3 320	4 100*	2 130	3 260*	1 490			1 340*	1 260
-5' 0"	**lbs**	**10,150***	**10,150***	**20,000***	**13,050**	**12,850***	**6,850**	**9,250***	**4,450**	**4,750***	**3,150**			**3,500***	**3,050**
(1.5 m)	kg	4 560*	4 560*	9 100*	6 090	5 930*	3 190	4 270*	2 060	2 640*	1 460			1 580*	1 390
-10' 0"	**lbs**	**15,050***	**15,050***	**19,200***	**13,200**	**12,450***	**6,900**	**8,800***	**4,500**					**4,550***	**3,750**
(3.0 m)	kg	6 670*	6 670*	8 880*	6 150	5 770*	3 200	4 090*	2 080					2 050*	1 690
-15' 0"	**lbs**	**24,050***	**24,050***	**15,750***	**13,600**	**10,150***	**7,250**							**7,350***	**5,500**
(4.5 m)	kg	10 700*	10 700*	7 360*	6 350*	4 790*	3 360							3 290*	2 430

Radius of Load - Regular Undercarriage with Blade Up
9′ 11″ (3.01 m) Arm with 15′ 2″ (4.63 m) Boom and 900 lb. (410 kg) Bucket with Power-Boost Applied

End / Side		5' 0" (1.5 m) End	5' 0" (1.5 m) Side	10' 0" (3.0 m) End	10' 0" (3.0 m) Side	15' 0" (4.5 m) End	15' 0" (4.5 m) Side	20' 0" (6.0 m) End	20' 0" (6.0 m) Side	25' 0" (7.5 m) End	25' 0" (7.5 m) Side	30' 0" (9.0 m) End	30' 0" (9.0 m) Side	Cap at Max. Reach End	Cap at Max. Reach Side
+25' 0"	**lbs**													**3,100***	**3,100***
(7.5 m)	kg													1 370*	1 370*
+20' 0"	**lbs**							**4,850***	**4,850***					**2,650***	**2,650***
(6.0 m)	kg							2 240*	2 240*					1 200*	1 200*
+15' 0"	**lbs**							**5,750***	**5,050**	**4,150***	**3,300**			**2,550***	**2,550***
(4.5 m)	kg							2 620*	2 350	2 050	1 550			1 150*	1 150*
+10' 0"	**lbs**					**7,500***	**7,500***	**6,350**	**4,850**	**4,300**	**3,200**			**2,550***	**2,550***
(3.0 m)	kg					3 450*	3 450*	2 940	2 240	2 000	1 500			1 150*	1 150*
+5' 0"	**lbs**			**14,400***	**13,700**	**9,650***	**7,200**	**6,050**	**4,550**	**4,150**	**3,100**			**2,700***	**2,500**
(1.5 m)	kg			6 630*	6 360	4 480	3 340	2 810	2 110	1 930	1 440			1 210*	1 140
Ground Line	**lbs**	**5,850***	**5,850***	**18,250**	**12,350**	**9,100**	**6,650**	**5,750**	**4,250**	**4,000**	**2,950**			**2,950***	**2,550**
	kg	2 610*	2 610*	8 500	5 750	4 240	3 090	2 680	1 980	1 870	1 380			1 340*	1 160
-5' 0"	**lbs**	**10,150***	**10,150***	**17,700**	**12,000***	**8,800**	**6,350**	**5,600**	**4,100**	**4,000**	**2,900**			**3,500***	**2,850**
(1.5 m)	kg	4 560*	4 560*	8 230	5 590	4 090	2 950	2 600	1 910	1 850	1 350			1 580*	1 280
-10' 0"	**lbs**	**15,050***	**15,050***	**17,900**	**12,150**	**8,800**	**6,400**	**5,650**	**4,150**					**4,550***	**3,500**
(3.0 m)	kg	6 670*	6 670*	8 370	5 650	4 100	2 970	2 630	1 930					2 050*	1 560
-15' 0"	**lbs**	**24,050***	**24,050***	**15,750***	**12,600**	**9,050**	**6,750**							**6,950**	**5,100**
(4.5 m)	kg	10 700*	10 700*	7 360*	5 850	4 210	3 130							3 070	2 260

Notes: Excavator lifting capacities

1. Lifting capacities shown should not be exceeded. Weight of all lifting accessories must be deducted from the above lifting capacities.
2. Lifting capacities are based on machine standing on firm, uniform supporting surface. User must make allowances for job conditions such as soft or uneven ground.
3. Lifting capacities shown do not exceed 75% of minimum tipping loads or 87% of hydraulic capacities. **Capacities marked with an asterisk (*) are limited by hydraulic capacities.**
4. Least stable position is over the side.
5. Operator should be fully acquainted with the Operator's Manual & Operating Safety Booklet, furnished by LBX before operating the machine.
6. Capacities apply only to the machine as originally manufactured and normally equipped by LBX Company, LLC.
7. Lift capacity ratings are based on ISO 10567, "Earthmoving Machinery - Hydraulic Excavators - Lift Capacity."

LIFT CAPACITIES

Radius of Load - Regular Undercarriage with Blade Down
6' 11" (2.11 m) Arm with 15' 2" (4.63 m) Boom and 900 lb. (410 kg) Bucket with Power-Boost Applied

End / Side		5' 0" (1.5 m) End	5' 0" (1.5 m) Side	10' 0" (3.0 m) End	10' 0" (3.0 m) Side	15' 0" (4.5 m) End	15' 0" (4.5 m) Side	20' 0" (6.0 m) End	20' 0" (6.0 m) Side	25' 0" (7.5 m) End	25' 0" (7.5 m) Side	30' 0" (9.0 m) End	30' 0" (9.0 m) Side	Cap at Max. Reach End	Cap at Max. Reach Side
+25' 0"	**lbs**													**4,000***	**4,000***
(7.5 m)	kg													1 770*	1 770*
+20' 0"	**lbs**					**6,250***	**6,250***	**4,050***	**4,050***					**3,250***	**3,250***
(6.0 m)	kg					2 900*	2 900*	2 280*	2 280*					1 470*	1 470*
+15' 0"	**lbs**					**7,100***	**7,100***	**6,550***	**5,150**					**3,050***	**3,050***
(4.5 m)	kg					3 260*	3 260*	3 030*	2 390					1 380*	1 380*
+10' 0"	**lbs**			**12,350***	**12,350***	**9,200***	**7,950**	**7,600***	**4,950**					**3,050***	**3,050***
(3.0 m)	kg			5 700*	5 700*	4 270*	3 690	3 480*	2 300					1 380*	1 380*
+5' 0"	**lbs**			**17,400***	**13,950**	**11,450***	**7,400**	**8,600***	**4,700**	**3,900***	**3,200**			**3,200***	**3,150**
(1.5 m)	kg			8 050*	6 490	5 310*	3 440	3 970*	2 180	2 370*	1 500			1 440*	1 440
Ground Line	**lbs**			**16,800***	**13,150**	**12,750***	**7,000**	**9,250***	**4,500**					**3,550***	**3,300**
	kg			7 280*	6 100	5 900*	3 250	4 260*	2 090					1 600*	1 490
-5' 0"	**lbs**	**12,100***	**12,100***	**19,800***	**13,250**	**12,800***	**6,900**	**9,150***	**4,450**					**4,300***	**3,750**
(1.5 m)	kg	5 460*	5 460*	9 130*	6 180	5 920*	3 200	4 230*	2 070					1 930*	1 700
-10' 0"	**lbs**	**18,600***	**18,600***	**17,500***	**13,550**	**11,550***	**7,100**							**6,000***	**4,900**
(3.0 m)	kg	8 170*	8 170*	8 100*	6 310	5 380*	3 280							2 670*	2 200
-15' 0"	**lbs**													**9,750***	**9,750***
(4.5 m)	kg													3 830*	3 830*

Radius of Load - Regular Undercarriage with Blade Up
6' 11" (2.11 m) Arm with 15' 2" (4.63 m) Boom and 900 lb. (410 kg) Bucket with Power-Boost Applied

End / Side		5' 0" (1.5 m) End	5' 0" (1.5 m) Side	10' 0" (3.0 m) End	10' 0" (3.0 m) Side	15' 0" (4.5 m) End	15' 0" (4.5 m) Side	20' 0" (6.0 m) End	20' 0" (6.0 m) Side	25' 0" (7.5 m) End	25' 0" (7.5 m) Side	30' 0" (9.0 m) End	30' 0" (9.0 m) Side	Cap at Max. Reach End	Cap at Max. Reach Side
+25' 0"	**lbs**													**4,000***	**4,000***
(7.5 m)	kg													1 770*	1 770*
+20' 0"	**lbs**					**6,250***	**6,250***	**4,050***	**4,050***					**3,250***	**3,250***
(6.0 m)	kg					2 900*	2 900*	2 280*	2 260					1 470*	1 470*
+15' 0"	**lbs**					**7,100***	**7,100***	**6,350**	**4,800**					**3,050***	**3,050***
(4.5 m)	kg					3 260*	3 260*	2 940	2 240					1 380*	1 380*
+10' 0"	**lbs**			**12,350***	**12,350***	**9,200***	**7,400**	**6,150**	**4,600**					**3,050***	**3,050***
(3.0 m)	kg			5 700*	5 700*	4 270*	3 440	2 850	2 140					1 380*	1 380*
+5' 0"	**lbs**			**17,400***	**12,850**	**9,350**	**6,900**	**5,850**	**4,350**	**3,900***	**3,000**			**3,200***	**2,950**
(1.5 m)	kg			8 050*	5 970	4 360	3 200	2 730	2 030	1 880	1 390			1 440*	1 330
Ground Line	**lbs**			**16,800***	**12,050**	**8,950**	**6,500**	**5,650**	**4,200**					**3,550***	**3,050**
	kg			7 280*	5 610	4 160	3 020	2 640	1 940					1 600*	1 380
-5' 0"	**lbs**	**12,100***	**12,100***	**17,950**	**12,200**	**8,800**	**6,400**	**5,600**	**4,150**					**4,300***	**3,500**
(1.5 m)	kg	5 460*	5 460*	8 290	5 680	4 100	2 970	2 610	1 920					1 930*	1 570
-10' 0"	**lbs**	**18,600***	**18,600***	**17,500***	**12,450**	**9,000**	**6,550**							**6,000***	**4,550**
(3.0 m)	kg	8 170*	8 170*	8 100*	5 810	4 180	3 050							2 670*	2 050
-15' 0"	**lbs**													**9,750***	**9,750***
(4.5 m)	kg													3 830*	3 750

LIFT CAPACITIES

Radius of Load - Long Undercarriage
8′ 2″ (2.50 m) Arm with 15′ 2″ (4.63 m) Boom and 900 lb. (410 kg) Bucket with Power-Boost Applied

End / Side		5' 0" (1.5 m) End	5' 0" (1.5 m) Side	10' 0" (3.0 m) End	10' 0" (3.0 m) Side	15' 0" (4.5 m) End	15' 0" (4.5 m) Side	20' 0" (6.0 m) End	20' 0" (6.0 m) Side	25' 0" (7.5 m) End	25' 0" (7.5 m) Side	30' 0" (9.0 m) End	30' 0" (9.0 m) Side	Cap at Max. Reach End	Cap at Max. Reach Side
+25' 0"	**lbs**					**4,050***	**4,050***							**3,250***	**3,250***
(7.5 m)	kg					1 840*	1 840*							1 440*	1 440*
+20' 0"	**lbs**							**4,950***	**4,750**					**2,700***	**2,700***
(6.0 m)	kg							2 390*	2 230					1 220*	1 220*
+15' 0"	**lbs**					**6,400***	**6,400***	**6,100***	**4,700**					**2,550***	**2,550***
(4.5 m)	kg					2 920*	2 920*	2 850*	2 190					1 150*	1 150*
+10' 0"	**lbs**			**11,500***	**11,500***	**8,600***	**7,300**	**7,000**	**4,500**	**4,750***	**3,000**			**2,550***	**2,550***
(3.0 m)	kg			5 290*	5 290*	3 980*	3 380	3 250	2 100	2 230	1 400			1 160*	1 160*
+5' 0"	**lbs**			**16,750***	**12,750**	**10,800**	**6,750**	**6,750**	**4,250**	**4,650**	**2,900**			**2,700***	**2,600**
(1.5 m)	kg			7 730*	5 920	5 020	3 130	3 150	1 980	2 170	1 350			1 220*	1 180
Ground Line	**lbs**	**5,600***	**5,600***	**18,450***	**11,750**	**10,400**	**6,300**	**6,550**	**4,050**	**4,550**	**2,800**			**3,000***	**2,700**
	kg	2 510*	2 510*	7 980*	5 470	4 840	2 930	3 040	1 880	2 130	1 300			1 360*	1 220
-5' 0"	**lbs**	**11,150***	**11,150***	**20,200***	**11,650**	**10,150**	**6,100**	**6,400**	**3,950**					**3,600***	**3,050**
(1.5 m)	kg	5 020*	5 020*	9 280*	5 430	4 740	2 840	2 990	1 830					1 630*	1 370
-10' 0"	**lbs**	**17,700***	**17,700***	**18,500***	**11,850**	**10,250**	**6,250**	**6,550**	**4,050**					**4,900***	**3,850**
(3.0 m)	kg	7 830*	7 830*	8 570*	5 530	4 780	2 890	3 040	1 890					2 190*	1 730
-15' 0"	**lbs**			**13,800***	**12,200**	**8,250***	**6,500**							**7,750***	**6,250**
(4.5 m)	kg			6 500*	5 690	4 040*	3 010							3 520*	2 730

Radius of Load - Long Undercarriage
9′ 11″ (3.01 m) Arm with 15′ 2″ (4.63 m) Boom and 900 lb. (410 kg) Bucket with Power-Boost Applied

End / Side		5' 0" (1.5 m) End	5' 0" (1.5 m) Side	10' 0" (3.0 m) End	10' 0" (3.0 m) Side	15' 0" (4.5 m) End	15' 0" (4.5 m) Side	20' 0" (6.0 m) End	20' 0" (6.0 m) Side	25' 0" (7.5 m) End	25' 0" (7.5 m) Side	30' 0" (9.0 m) End	30' 0" (9.0 m) Side	Cap at Max. Reach End	Cap at Max. Reach Side
+25' 0"	**lbs**													**3,100***	**3,100***
(7.5 m)	kg													1 370*	1 370*
+20' 0"	**lbs**							**4,850***	**4,850***					**2,650***	**2,650***
(6.0 m)	kg							2 240*	2 240*					1 200*	1 200*
+15' 0"	**lbs**							**5,750***	**4,850**	**4,150***	**3,150**			**2,550***	**2,550***
(4.5 m)	kg							2 620*	2 250	2 060*	1 470			1 150*	1 150*
+10' 0"	**lbs**					**7,500***	**7,300**	**6,500***	**4,600**	**4,850**	**3,050**			**2,550***	**2,500**
(3.0 m)	kg					3 450*	3 390	2 990*	2 140	2 260	1 420			1 150*	1 120
+5' 0"	**lbs**			**14,400***	**13,100**	**10,150***	**6,850**	**6,850**	**4,300**	**4,700**	**2,900**			**2,700***	**2,350**
(1.5 m)	kg			6 630*	6 090	4 700*	3 190	3 180	2 000	2 190	1 360			1 210*	1 070
Ground Line	**lbs**	**5,850***	**5,850***	**18,550***	**11,800**	**10,400**	**6,300**	**6,550**	**4,050**	**4,550**	**2,800**			**2,950***	**2,400**
	kg	2 610*	2 610*	8 570*	5 490	4 850	2 940	3 040	1 880	2 130	1 300			1 340*	1 090
-5' 0"	**lbs**	**10,150***	**10,150***	**20,000***	**11,450**	**10,100**	**6,050**	**6,350**	**3,900**	**4,500**	**2,750**			**3,500***	**2,650**
(1.5 m)	kg	4 560*	4 560*	9 100*	5 320	4 700	2 800	2 960	1 810	2 100	1 270			1 580*	1 210
-10' 0"	**lbs**	**15,050***	**15,050***	**19,200***	**11,550**	**10,100**	**6,050**	**6,450**	**3,950**					**4,550***	**3,300**
(3.0 m)	kg	6 670*	6 670*	8 880*	5 390	4 700	2 820	2 990	1 830					2 050*	1 480
-15' 0"	**lbs**	**24,050***	**24,050***	**15,750***	**12,050**	**10,150***	**6,450**							**7,350***	**4,850**
(4.5 m)	kg	10 700*	10 700*	7 360*	5 590	4 740	2 980							3 290*	2 150

Notes: Excavator lifting capacities

1. Lifting capacities shown should not be exceeded. Weight of all lifting accessories must be deducted from the above lifting capacities.
2. Lifting capacities are based on machine standing on firm, uniform supporting surface. User must make allowances for job conditions such as soft or uneven ground.
3. Lifting capacities shown do not exceed 75% of minimum tipping loads or 87% of hydraulic capacities. **Capacities marked with an asterisk (*) are limited by hydraulic capacities.**
4. Least stable position is over the side.
5. Operator should be fully acquainted with the Operator's Manual & Operating Safety Booklet, furnished by LBX before operating the machine.
6. Capacities apply only to the machine as originally manufactured and normally equipped by LBX Company, LLC.
7. Lift capacity ratings are based on ISO 10567, "Earthmoving Machinery - Hydraulic Excavators - Lift Capacity."

LIFT CAPACITIES

Radius of Load - Long Undercarriage
6′ 11″ (2.11 m) Arm with 15′ 2″ (4.63 m) Boom and 900 lb. (410 kg) Bucket with Power-Boost Applied

End / Side		5′ 0″ (1.5 m) End	5′ 0″ (1.5 m) Side	10′ 0″ (3.0 m) End	10′ 0″ (3.0 m) Side	15′ 0″ (4.5 m) End	15′ 0″ (4.5 m) Side	20′ 0″ (6.0 m) End	20′ 0″ (6.0 m) Side	25′ 0″ (7.5 m) End	25′ 0″ (7.5 m) Side	30′ 0″ (9.0 m) End	30′ 0″ (9.0 m) Side	Cap at Max. Reach End	Cap at Max. Reach Side
+25′ 0″	**lbs**													**4,000***	**4,000***
(7.5 m)	kg													1 770*	1 770*
+20′ 0″	**lbs**					**6,250***	**6,250***	**4,050***	**4,050***					**3,250***	**3,250***
(6.0 m)	kg					2 900*	2 900*	2 280*	2 160					1 470*	1 470*
+15′ 0″	**lbs**					**7,100***	**7,100***	**6,550***	**4,600**					**3,050***	**3,050***
(4.5 m)	kg					3 260*	3 260*	3 030*	2 140					1 380*	1 380*
+10′ 0″	**lbs**			**12,350***	**12,350***	**9,200***	**7,100**	**6,900**	**4,400**					**3,050***	**2,900**
(3.0 m)	kg			5 700*	5 700*	4 270*	3 290	3 220	2 040					1 380*	1 320
+5′ 0″	**lbs**			**17,400***	**12,300**	**10,700**	**6,550**	**6,650**	**4,150**	**3,900***	**2,800**			**3,200***	**2,750**
(1.5 m)	kg			8 050*	5 700	4 980	3 050	3 100	1 930	2 140	1 310			1 440*	1 250
Ground Line	**lbs**			**16,800***	**11,500**	**10,250**	**6,150**	**6,450**	**3,950**					**3,550***	**2,850**
	kg			7 280*	5 350	4 770	2 870	3 000	1 840					1 600*	1 300
-5′ 0″	**lbs**	**12,100***	**12,100***	**19,800***	**11,600**	**10,100**	**6,050**	**6,400**	**3,900**					**4,300***	**3,300**
(1.5 m)	kg	5 460*	5 460*	9 130*	5 410	4 710	2 820	2 970	1 820					1 930*	1 480
-10′ 0″	**lbs**	**18,600***	**18,600***	**17,500***	**11,900**	**10,300**	**6,250**							**6,000***	**4,300**
(3.0 m)	kg	8 170*	8 170*	8 100*	5 540	4 780	2 900							2 670*	1 940
-15′ 0″	**lbs**													**9,750***	**9,550**
(4.5 m)	kg													3 830*	3 570

Bucket Sizes

130 X4 Excavator with Blade

Bucket Type	SAE Heaped Capacity (yd³)	SAE Heaped Capacity (m³)	Width Outside Lip (in)	Width Outside Lip (mm)	Bucket Weight (lbs)	Bucket Weight (kg)	Number of Teeth	Arm Length 6′ 11″ 2.11 m	Arm Length 8′ 2″ 2.50 m	Arm Length 9′ 11″ 3.01 m
STDP Standard duty plate	0.50	0.38	24	610	791	359	4	H	H	H
	0.66	0.50	30	762	889	403	4	H	H	M
	0.82	0.63	36	914	1007	457	5	M	M	L
	0.98	0.75	42	1067	1110	503	6	L	L	N/A
HDP Heavy duty plate	0.50	0.38	24	610	1064	483	4	H	H	H
	0.65	0.50	30	762	1183	537	4	H	H	M
	0.81	0.62	36	914	1331	604	5	M	L	L
	0.97	0.74	42	1067	1450	658	5	L	L	N/A
POWER HDP for use with ESCO multi-pin grabber only	0.42	0.32	24	610	1225	556	4	H	H	H
	0.55	0.42	30	762	1314	596	4	H	H	M
	0.68	0.52	36	914	1431	649	5	M	M	L
DITCH	0.86	0.66	60	1524	970	440	0	M	M	L
	0.96	0.73	66	1676	1040	472	0	L	L	N/A

130 X4 Excavator with Long Undercarriage

Bucket Type	SAE Heaped Capacity (yd³)	SAE Heaped Capacity (m³)	Width Outside Lip (in)	Width Outside Lip (mm)	Bucket Weight (lbs)	Bucket Weight (kg)	Number of Teeth	Arm Length 6′ 11″ 2.11 m	Arm Length 8′ 2″ 2.50 m	Arm Length 9′ 11″ 3.01 m
STDP Standard duty plate	0.50	0.38	24	610	791	359	4	H	H	H
	0.66	0.50	30	762	889	403	4	H	H	M
	0.82	0.63	36	914	1007	457	5	M	L	L
	0.98	0.75	42	1067	1110	503	6	L	L	N/A
HDP Heavy duty plate	0.50	0.38	24	610	1064	483	4	H	H	H
	0.65	0.50	30	762	1183	537	4	H	M	L
	0.81	0.62	36	914	1331	604	5	L	L	N/A
	0.97	0.74	42	1067	1450	658	5	L	N/A	N/A
POWER HDP for use with ESCO multi-pin grabber only	0.42	0.32	24	610	1225	556	4	H	H	H
	0.55	0.42	30	762	1314	596	4	H	H	M
	0.68	0.52	36	914	1431	649	5	M	M	L
DITCH	0.86	0.66	60	1524	970	440	0	M	L	L
	0.96	0.73	66	1676	1040	472	0	L	L	N/A

Approval Code For Arm/Bucket Combinations

H..... Heavy material (up to 3,370 lbs./yd³)
M ..... Medium material (up to 2,700 lbs./yd³)
L..... Light material (up to 2,020 lbs./yd³)
N/A..... Not applicable

STDP ..... Standard duty plate
HDP ..... Heavy duty plate
XDP ..... Extreme duty plate
POWER ..... HDP for use with **ESCO** multi-pin grabber only

Standard & Optional Equipment

Standard Equipment

CAB

- 12V Power Outlet
- AM/FM Sound System
- Anti-Theft Device
- Auxiliary Switches on Control Lever
- Bluetooth
- Cab Filter - External
- Cab Handrails
- Cab Interior Light
- Cab ISO-Mounts
- Cab Light (2)
- Clear Roof Window
- Climate Control A/C and Heater
- Cup Holder
- Defroster
- Digital Clock
- Emergency Exit and Hammer
- Face Vent
- Floor Mat
- FOPS Level 1 Certified
- Front Window One-Touch Lock
- Gate Lock Hydraulic Activation
- Horn
- Hour Meter (Digital)
- LCD Color Monitor
- Magazine Storage Rack
- Maintenance Interval Reminders
- MP3 Auxiliary Input Jack
- On-Board Diagnostic System
- One-Piece Right Window
- Radio Mute Switch
- Rear View Camera
- Rear View Mirrors (2)
- RemoteCARE Support System (GPS)
- Roof Sun Shade
- ROPS Certified Structure
- Safety Glass Windows
- SCM Air-Suspension Seat
- Seat Recline
- Selectable Monitor Languages
- Small Storage
- Travel Alarm with Cancel Switch
- Trip Meter (Digital)
- USB Input
- Wiper & Washer
- Wiper Switch on RH Joystick

ENGINE

- 50A Alternator
- Air Filter (Double Element)
- Air Filter Restriction Indicator
- Auto Warm-Up System
- Auto-Idle
- Auto-Idle Engine Shutdown
- Battery Disconnect Switch w/ LED Light
- Cooling Fan
- Diesel Oxidation Catalyst (DOC)
- Drain for Fuel Tank
- Dual Remote Fuel Filters with Water Separators
- EGR Coolers
- Emergency Engine Stop
- Engine Idle System
- Engine Oil Sample Port
- Engine Protection Feature
- External Fuel Gauge
- External DEF Gauge
- Fan Housing
- Fuel Cooler
- Fuel Filter Restriction Indicator
- Fuel Management System
- Fuel Shut-Off Valve
- Fuel Usage History
- Fuel Usage Monitor
- Glow Plug Pre-Heat
- Idle-Start
- Intercooler
- Neutral Start
- One-Touch Idle
- Passive Emissions Regeneration
- Radiator/Oil Cooler/Intercooler Protective Screen
- Remote Engine Oil Drain
- Remote Oil Filter
- Selective Catalytic Reduction (SCR)
- DEF Gauge on Monitor
- VGT Turbocharger

HYDRAULICS

- Anti-Drift Valves
- Arm Regeneration
- Arm Speed Assistance (2 Pump Flow)
- Attachment Cushion Valve
- Auto Swing Priority
- Auxiliary Flow Control
- Auxiliary Tool Settings (Memory)
- Auxiliary Valve
- Boom Regeneration
- Boom Speed Assistance (2 Pump Flow)
- Bucket Curl Assist
- Control Levers Pre-Wired for Auxiliary Hyd.
- Control Pattern Changer (2 way)
- Electronically Controlled Hydraulic Pumps
- Fire Wall
- Hydraulic Filter Restriction Indicator
- Hydraulic Oil Sample Port
- Long Life Hydraulic Oil (5,000 Hour)
- Neutral Pump De-Stroke
- Oil Cooler
- Power Boost
- Power Save
- Pressure Reading on Monitor
- Pump Stand-By Pressure
- Straight Travel Circuit

UNDERCARRIAGE

- 800 mm (31.5" in) 3-Bar Steel Grousers
- Carbody Belly Pan (Swivel Guarding)
- Lashing Points (Tie-Downs)
- Long Undercarriage
- Sealed Link Chain
- Steps
- Strutted Track Chain
- X-Pattern Carbody

UPPERSTRUCTURE

- Belly Pans
- Center Cover (Over Main CV)
- Fuel Tank Belly Pan
- Hand Rail (RH access)
- ISO Guard Rails
- Lifting Eyes for Counterweight
- Lockable Fuel Cap and Service Doors
- Lockable Tool Box
- Turntable Tub
- Work Lights (Boom and Tool Box)

ATTACHMENT

- 8' 2" (2.50 m) Arm
- 15' 2" (4.63 m) Main Boom Section
- Auxiliary Pipe Brackets
- Boom Work Light
- Bucket Anti-Clatter Device
- Chrome Pins
- Easy Maintenance System (EMS)
- Remote Lube Bank
- Teardrop Pin Retention Keepers

Optional Equipment

CAB

- 270° WAVES™ Camera System
- Cab Light (2 LED)
- Cab Sun Screen (rear)
- FOPS Head Guard (Level 2)
- Front Guard (Mesh)
- Front Guard (OPG 1,2)
- LED Light Kit for Side Camera (1)
- LED Lights for Rear Camera (2)
- Rain Deflector
- SCM Air-Suspension Seat with Tilt & Heater

ENGINE

- Refuel Pump

HYDRAULICS

- Free Swing
- Hose Burst Check Valve
- Proportional Hydraulic Controls

AUXILIARY HYDRAULIC OPTIONS

- Single-Acting Aux. w/ Proportional Joysticks
- Multi-Function Aux. w/ in-cab pressure setting control
- Thumb Aux. w/ Proportional Joysticks
- Combination Aux. w/ in-cab pressure setting control

UNDERCARRIAGE

- 600 mm (23.5" in) 3-Bar Steel Grousers
- 700 mm (27.5" in) 3-Bar Steel Grousers
- Center Track Guide (single)
- Center Track Guide (double)

UPPERSTRUCTURE

- Rubber Bumper Guards

ATTACHMENT

- 9' 11" (3.01 m) Arm
- 6' 11" (2.11 m) Arm
- HD Bucket Linkage
- Quick Couplers
- Thumbs

Litho in USA 08/20 #LBX2426 supersedes #LBX2360

LBX® and Link-Belt® are registered trademarks. Copyright 2020. All rights reserved. We are constantly improving our products and therefore reserve the right to change designs and specifications.