Tunneling & Mining

Aliva®-246

Concrete Spraying Machine

Product Description

The Aliva®-246 is a sturdy concrete spraying machine for the dry spraying process.



Uses

Thanks to its variable output, the Aliva-246 can be used as well for small jobs, such as joint filling, as well for extensive slope consolidation work.

The Aliva-246.5 is available in the following versions:

- BASIC
  Electric drive, combined with BASIC-Dosing unit (not synchronized)
- EXTENDED
  Electric drive, combined with EXTENDED-Dosing unit (not synchronized)
- AIR
  With air drive, combined with BASIC-Dosing unit (not synchronized)

Tunneling & Mining

Product Data

Technical Data

Dimensions

With chassis

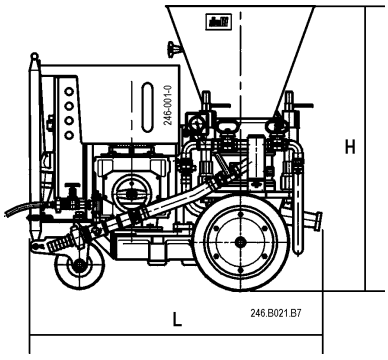

Length L	
BASIC / AIR	1130 mm
EXTENDED	1200 mm
Width	700 mm
Height H	
with rotor 0,7 + 2,0 L	1110 mm
with rotor 3,6 L	1180 mm
with rotor 5,6 L	1260 mm
Weight	
BASIC / AIR	approx. 320 kg
EXTENDED	approx. 450 kg
Content of hopper	45 liters

With pedestal

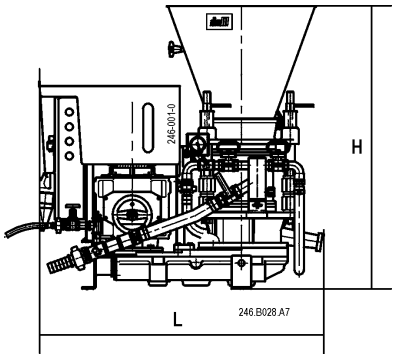

Length L	
BASIC / AIR	1130 mm
EXTENDED	1170 mm
Width	700 mm
Height H	
with rotor 0,7 + 2,0 L	1020 mm
with rotor 3,6 L	1090 mm
with rotor 5,6 L	1170 mm
Weight	
BASIC / AIR	approx. 315 kg
EXTENDED	approx. 430 kg
Content of hopper	45 liters

Drive

Electric (BASIC / EXTENDED)

Motor output	2,2 kW
Speed range	
BASIC	1500 rpm
EXTENDED	700–1800 rpm
Voltages	400 V 50/60 Hz
	440 V 60 Hz
	220 V 50/60 Hz
Protection	IP 55

With air motor (AIR)

Motor output	3 kW
Speed range	700-1800 rpm
Pressure	3.5 bar
Air consumption	4 Nm³/min.

Theoretical Conveying Output

Conveying (only dry)

Rotor L	Hose Ø mm	Conveying output *m³/h		max. grain mm	max. conveying distance (m) horizontal / vertical
		BASIC	EXTENDED+AIR		
0.7	32	0.4	0.2 -0.5	6	150/60 m**
2.0	32 + 38	1.1	0.6-1.4	12	
3.6	32 + 38	2.0	1.1-2.5	12	
5.6	50	3.2	1.7-4.0	16	

* *with theoretical filling degree of 100%, if motor with 60 Hz = 20% higher conveying capacity.*

** *more than 80 m conveying distance, use steel tubes.*

Tunneling & Mining

Theoretical Air Consumption

Hose Ø mm	Air consumption Nm³/min. ***	
	Dry spraying	
	60 m	120 m
32	3	4
38	5	6
50	8	10

*** *Air consumption data are approximate values and are depending on conveying output, conveying distance and hose diameter.*

Caution:
For the configuration AIR (with air motor) it has to be considered:
Total air consumption = Air consumption for conveying + Air consumption for air motor!

1 Nm^3/min = 35 cfm

Health and Safety Information

Important Notes

For the safe, correct operation of the unit please consult the current machine operating manual . Sika Schweiz AG cannot accept any liability for injury or damages caused by improper use, incorrect or inadequate operation, maintenance or repairs.

Legal Disclaimer

The information, and, in particular, the recommendations relating to the application and end-use of Sika products, are given in good faith based on Sika's current knowledge and experience of the products when properly stored, handled and applied under normal conditions in accordance with Sika's recommendations. In practice, the differences in materials, substrates and actual site conditions are such that no warranty in respect of merchantability or of fitness for a particular purpose, nor any liability arising out of any legal relationship whatsoever, can be inferred either from this information, or from any written recommendations, or from any other advice offered. The user of the product must test the product's suitability for the intended application and purpose. Sika reserves the right to change the properties of its products. The proprietary rights of third parties must be observed. All orders are accepted subject to our current terms of sale and delivery. Users must always refer to the most recent issue of the local Product Data Sheet for the product concerned, copies of which will be supplied on request.