Atlas Copco Underground Loaders

Scooptram® ST2G

Technical specification

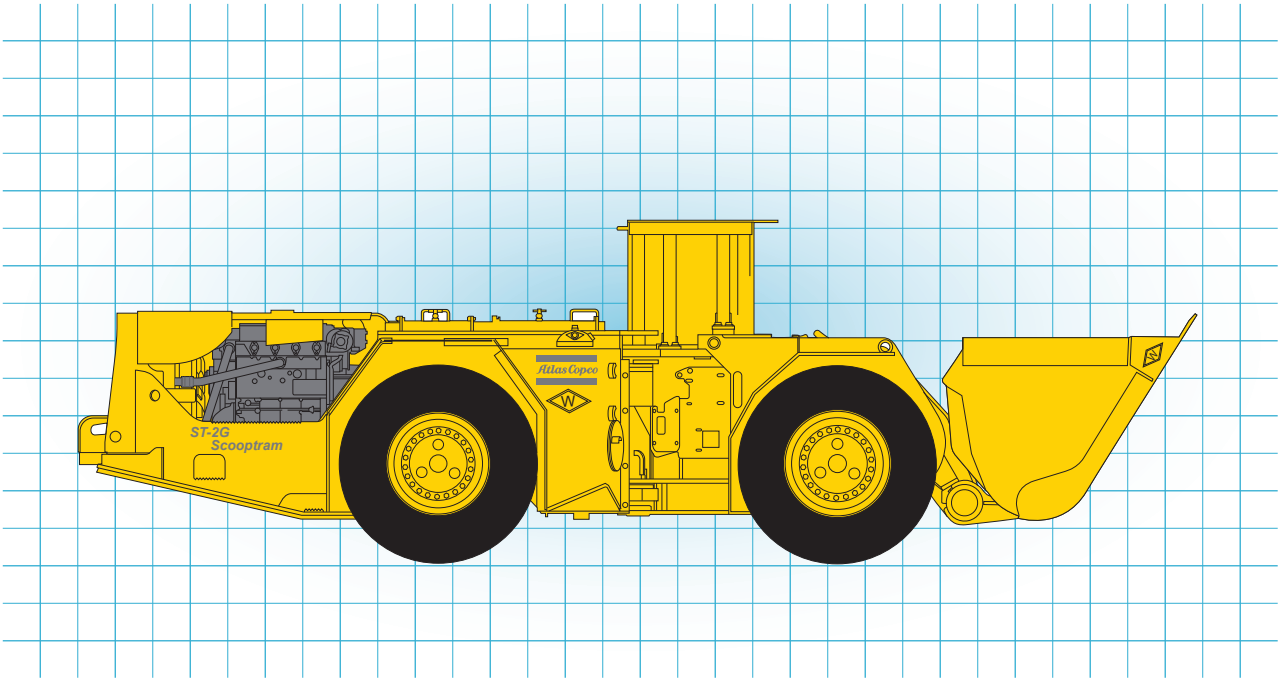

The Scooptram ST2G is a reliable 3600 kg tramming capacity Scooptram for smaller sized operations that range from narrow vein mines to construction sites - including those at high altitude. This vehicle has built its reputation bucket by bucket throughout the world .

Features

Load frame:

- A parallel boom design matched to an aggressive bucket configuration provide for efficient mucking operations

Operator's Compartment:

- Side seated operator position for efficient bi-directional operation with maximum visibility
- Ergonomic operator seat with seat belt for comfort during a full operating shift

Power frame:

- Conventional and proven components are well protected within the frame
- High ground clearance protects the machine from damage
- Three point mounting and anti-skip protection provides safe access for operators and service personnel

General:

- Long life roller bearing centre articulation joint
- Central manual lubrication

Atlas Copco

Specifications

Capacities	
SAE regulations	
Tramming capacity	3600 kg
Breakout force, hydraulic	9060 kg
Breakout force	5936 kg

Motion times	
Boom	
Raising	3.7 seconds
Lowering	3.0 seconds
Bucket	
Dumping	6.4 seconds

Engine (standard)

- Deutz Diesel BF4M1013EC
- MSHA Rating at 2,300 rpm..... 87 Kw (117 HP)
- Maximum torque at 1,500 rpm.....422 Nm
- Number of Cylinders .....4 in line
- Dislacement .....4.76 L
- Cooling ..... Water
- MSHA Part 7 ventilation
  - Vent Rate ..... 241 m^3/min
  - Particulate index ..... 212 m^3/min

Axles

Spicer 14D: Spiral bevel differential, full floating, planetary wheel end drive

- Differentials:
  - Front.....no spin
  - Rear.....standard
- Degree of rear axle oscillation .....Total 16° (8° on each side)

Brakes

- Service ..... Posi stop

Spring applied hydraulically spring released: , fully enclosed multiple wet discs at each wheel end

- Parking and emergency: as for service

System

- Fire extinguisher, 6 kg
- Central manual lubrication

Torque converter

Single stage

- Spicer..... C-270 Series

Transmission

Modulated power shift, 4 speeds forward and reverse

- Spicer..... R32000 Series

Exhaust system

Catalytic purifier plus exhaust silencer

Electrical system

- System Voltage .....24 Volt starting, 24 Volt accessories

Tires

- Nylon, smooth tread design for underground mine service, on demountable rims
- Tire size, front and rear.....12.00x24, 16 ply STMS L-5S , TT

** As applications and conditions vary, Atlas Copco recommends that the user consults with tire suppliers to obtain the optimum tire selection.*

Operator's compartment

- Side seated operator for bi-directional operation and maximum visibility
- Canopy: ISO ROPS/FOPS approved
- Monostick steering control
- Single lever dump and hoist control

Hydraulic system

- Heavy duty gear type pumps
- Cylinders.....Double acting, chrome plated stems
- Cylinder diameter
  - Steer cylinder (1), diameter.....127 mm
  - Hoist cylinder (1), diameter .....178 mm
  - Dump cylinder (1), diameter.....178 mm
- Pumps
  - Dump /hoist..... 91 + 91 L/min (at 2,300 rpm)
  - Steering ..... 91 L/min (at 2,300 rpm)
- Filtration ..... Suction line: 25 micron
- Dump /hoist system pressure.....11.4 MPa

Tank capacities

- Fuel .....148 litres
- Hydraulic .....144 litres

Steering

Articulated hydraulic power steering, pilot operated monostick control

- Turning angle..... 81° (40.5° each way)
- System pressure ..... 13.1 Mpa (1900 psi)

Left turning radius

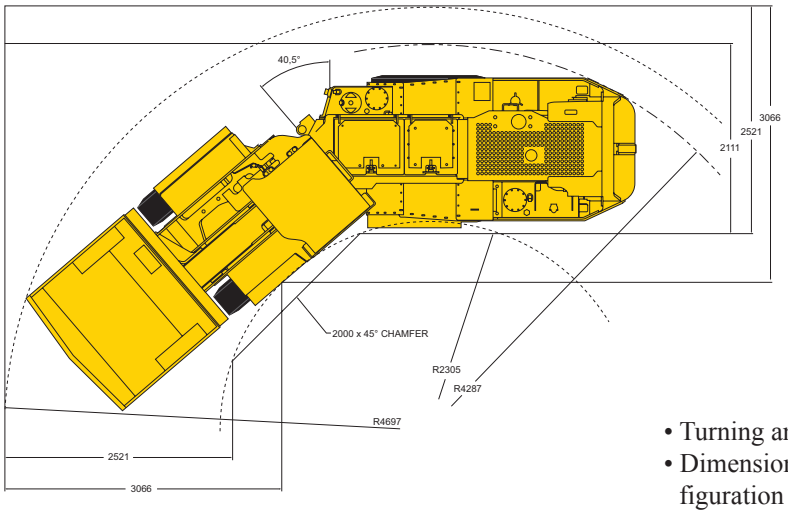

Drift size

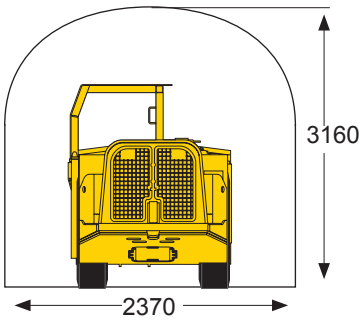

Rear view

- Turning angle +/-40.5°
- Dimensions shown are based on standard vehicle configuration with 27 mm tire deflection.
- All dimensions are shown in millimeters.

Grade performance

Percent grade	0.0	2.0	4.0	6.0	8.3	10.0	12.5	14.3	16.0	18.0	20.0	25.0	30.0
Ratio					1:12	1:10	1:8	1:7			1:5	1:4	
1st gear (km/h)	4.5	4.4	4.2	4.2	4.1	4.0	3.9	3.9	3.9	3.8	3.7	3.6	3.5
2nd gear (km/h)	9.1	8.7	8.4	8.2	7.9	7.8	7.5	7.2	6.9	6.4	5.8	4.5	3.4
3rd gear (km/h)	15.0	14.2	13.5	12.9	11.7	10.3	8.3	7.0	6.0	4.9	3.9		
4th gear (km/h)	25.4	23.3	19.7	13.9	9.4	6.0							

Standard configuration, bucket empty

Percent grade	0.0	2.0	4.0	6.0	8.3	10.0	12.5	14.3	16.0	18.0	20.0	25.0	30.0
Ratio					1:12	1:10	1:8	1:7			1:5	1:4	
1st gear (km/h)	4.4	4.3	4.2	4.1	4.0	3.9	3.8	3.8	3.7	3.7	3.6	3.4	3.1
2nd gear (km/h)	8.9	8.5	8.2	7.9	7.6	7.3	6.7	6.0	5.4	4.7	4.2	2.9	1.5
3rd gear (km/h)	15.1	13.9	12.4	10.6	8.2								
4th gear (km/h)	24.5	20.7	13.9	9.0	1.9								

Standard configuration, bucket loaded

Optional equipment

Main frame options
- Various bucket sizes
- Boom Up Lock Device
- Wheel Chocks and Chock Brackets
- Dump cylinder rod protector
- Knockdown - Specify weight and dimension limitations
- Shipping covers
- EOD bucket

Ergonomic option
- Wheel Steering Control

Tires
- 12.00R24 Michelin X Mine D2
- 12.00R24 Michelin X Mine D2+
- 12.00x24 Bridgestone MLS

System options
- Ansul Check Fire auto fire suppression
- Ansul Single bottle fire suppression w/Engine kill
- Lincoln auto lube w/Timer
- Manual hydraulic tank fill pump

Electrical system options
- Blue strobe light - Power on
- Audio-Visual Reverse Alarm

Controls and instruments options
- Block out 3rd and/or 4th gears
- Scooptram RRC
- RRC Interface

Documentation options
- LinkOne parts book CD
- LinkOne viewer
- Parts manual - Plasticised
- Service manual - Plasticised

Hydraulic system options
- EOD hydraulics & controls only
- Brake release tow hook

Miscellaneous options
- Tool box

Dimensions and weights

• Approximate net weight ..... 11 540 kg*
**Standard equipped vehicle with empty bucket*

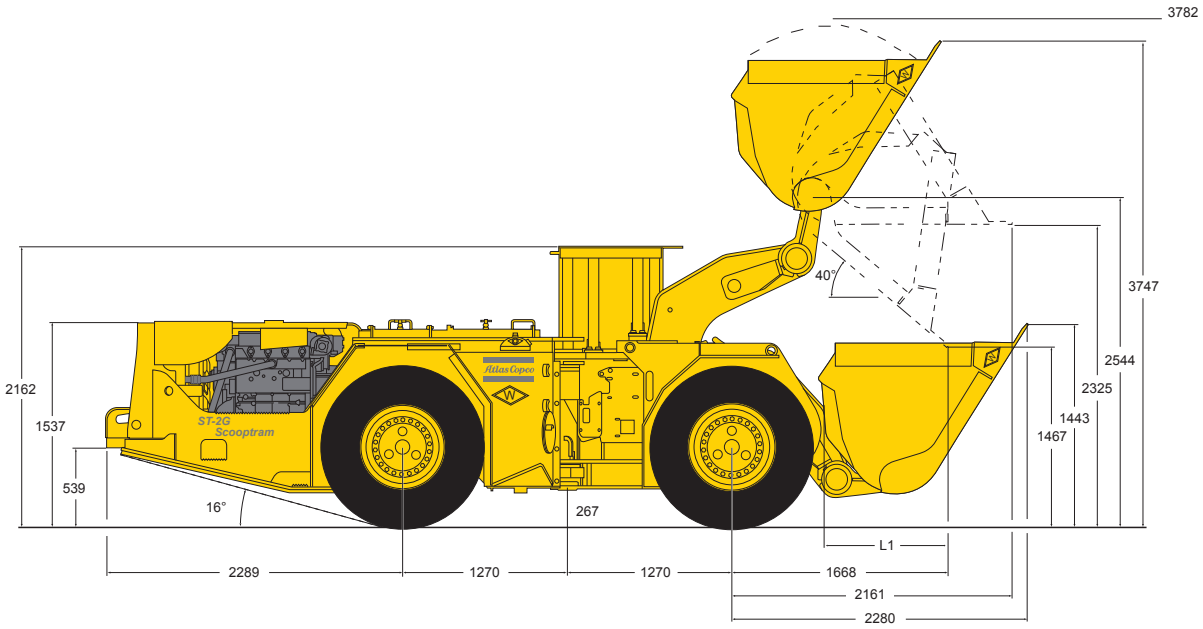

Side view

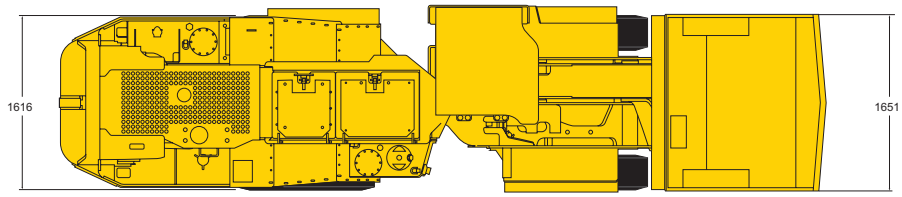

Top view

• Dimensions shown are based on standard vehicle configuration with 27 mm tire deflection.
• All dimensions are shown in millimeters.

© Copyright 2006, Atlas Copco Rock Drills AB, Örebro, Sweden. Any unauthorized use or copying of the contents or any part thereof is prohibited. This applies in particular to trademarks, model denominations, part numbers and drawings. Illustrations and photos in this brochure may show equipment with optional extras. Specifications and equipment subjects to change without notice. Consult your Atlas Copco Customer Center for specific information.

McDowell Since 1968

2018 Kingsway Blvd.
Sudbury, Ontario, Canada P3B 4J8
Tel: +1 (705) 566-8190
www.bmcdowell.com
sales@bmcdowell.com

Atlas Copco

9851 2252 01
12/2006