

2018 Kingsway Blvd
Sudbury, Ontario Canada P3B 4J8
+1(705)566-8190
www.bmcdowell.com
sales@bmcdowell.com

Link-Belt EXCAVATORS

McDowell Since 1968
2018 Kingsway Blvd
Sudbury, Ontario Canada P3B 4J8
+1(705)566-8190
www.bmcdowell.com
sales@bmcdowell.com

SPEC SHEET (PRELIMINARY)

220 X4S

220 X4S SPECIFICATIONS

SAE Net Horsepower
160 hp (119.3 kW)

Operating Weight
49,200 lbs (22,300 kg)

Swing Torque
47,200 lbf-ft (64.0 kNm)



ENGINE

Engine	Isuzu AR-4HK1X Final Tier 4 turbocharged diesel engine
SAE J 1349 net horsepower	160 hp (119.3 kW) @ 1600 rpm
Displacement	317 cu in (5.2 L)
Maximum Torque	457 lbf-ft (620 Nm) @ 1500 rpm
Starter	24 V - 5.0 kW
Alternator	85 amp
Voltage	24 V

HYDRAULIC SYSTEM

Hydraulic Pumps	
Pump Output	2 x 55.7 gpm (211 L/min)
Pilot Pump Maximum Flow	4.8 gpm (18 L/min)
Relief Valve Settings	
Boom Up / Arm / Bucket	4,970 psi (34.3 MPa)
in Power Boost	5,410 psi (37.3 MPa)
Swing Circuit	4,260 psi (29.4 MPa)
Travel Circuit	4,970 psi (34.3 MPa)
Hydraulic Cylinders	**Number of Cylinders - Bore x Stroke**
Boom	2 - 4.7” x 49.4” (120 mm x 1255 mm)
Arm	5.5” x 57.5” (140 mm x 1460 mm)
Bucket	4.7” x 39.8” (120 mm x 1010 mm)

SWING

Swing Speed	11.5 rpm
Tail Swing	9’3” (2.83 m)
Swing Torque	47,200 lbf-ft (64.0 kNm)

220 X4S SPECIFICATIONS

UNDERCARRIAGE

Carrier Rollers	2 per Side
Track Rollers	8 per Side
Track Link Pitch	7.5” (190 mm)
Shoes	49 per Side
Shoe Width	31.5” (800 mm)
Ground Pressure	5.1 psi (0.035 MPa)

TRAVEL SYSTEM

Travel Speeds	2.1 - 3.5 mph (3.4 - 5.6 km/h)
Drawbar Pull	42,300 lbf (188 kN)
Gradeability	70% (35°)

ATTACHMENT

HD Boom	18’ 8” (5.70 m)
Available Arms	**Digging Force**
9’ 8” (2.94 m)	23,100 lbf (103.0 kN)
with Auto Power Boost	25,100 lbf (112.0 kN)
7’ 10” (2.40 m)	27,600 lbf (123.0 kN)
with Auto Power Boost	30,000 lbf (133.0 kN)
Bucket Digging Force	31,800 lbf (142.0 kN)
with Auto Power Boost	34,600 lbf (154.0 kN)

LUBRICANT AND COOLANT CAPACITY

Fuel Tank	108 Gallons (410 Liters)
Hydraulic System	74 Gallons (280 Liters)
Hydraulic Tank	42 Gallons (162 Liters)
Final Drive (per side)	1.2 Gallons (4.5 Liters)
Swing Drive	1.3 Gallons (5.0 Liters)
Engine Oil	6.1 Gallons (23.1 Liters)
DEF Tank	22 Gallons (84 Liters)
Coolant System	8.5 Gallons (32.3 Liters)

OPERATING WEIGHT

Working weight with 31.5” (800 mm) shoes, 18’ 8” (5.70 m) boom, 9’ 8” (2.94 m) arm, 1,940 lbs (880 kg) bucket, 8,380 lbs (3 800 kg) counterweight	49,200 lbs (22 300 kg)

220 X4S SPECIFICATIONS

WORKING RANGE

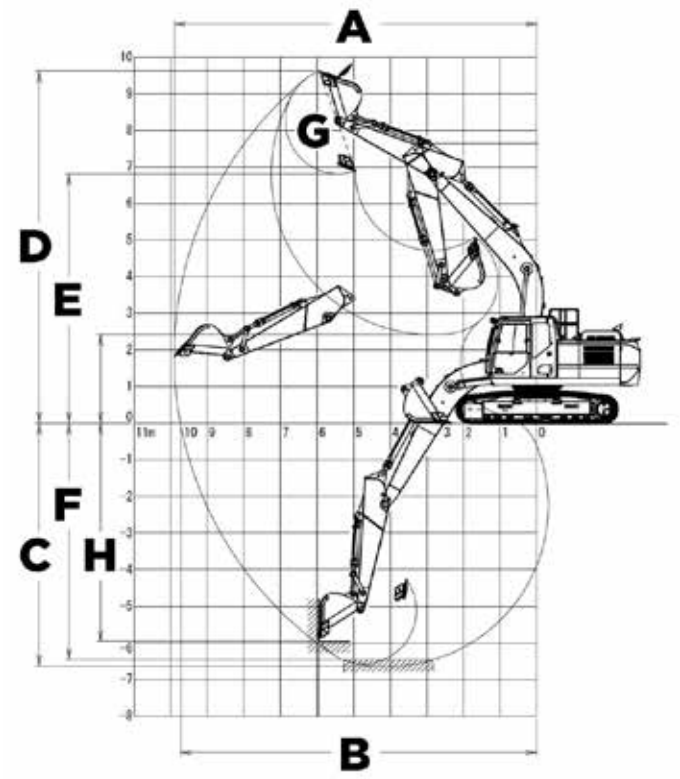

Machine Equipped with 18' 8" (5.7 m) Boom	Arm 9' 8" (2.94 m)	Arm 7' 10" (2.40 m)
A. Maximum reach	32' 6" (9.90 m)	30' 11" (9.42 m)
B. Maximum reach @ ground level	31' 11" (9.73 m)	30' 4" (9.24 m)
C. Maximum dig depth	21' 10" (6.64 m)	20' 1" (6.11 m)
D. Maximum dig height	31' 6" (9.61 m)	30' 10" (9.40 m)
E. Maximum dump height	22' 4" (6.81 m)	21' 7" (6.59 m)
F. Digging depth 8' (2.44 m) level bottom	21' 3" (6.47 m)	19' 4" (5.90 m)
G. Bucket rotation	177°	177°
H. Maximum vertical wall depth	19' 7" (5.96 m)	18' 0" (5.48 m)

TRAVEL DIMENSIONS

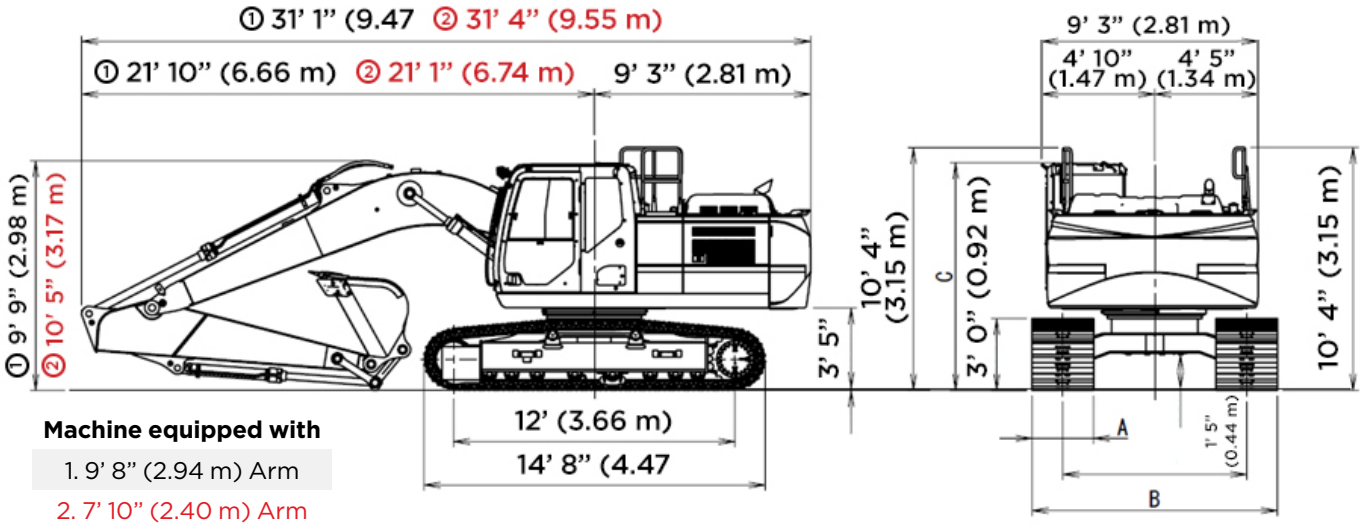

Machine equipped with

1. 9' 8" (2.94 m) Arm
2. 7' 10" (2.40 m) Arm

Cab Specification	C: Cab Height
STD. (No Equipment)	9' 8"(2.95 m)
With Head Guard	10' 1" (3.07 m)
With Vandal Cover	10' 1" (3.06 m)
With Head Guard & Vandal Cover	10' 4" (3.15 m)

Undercarriage	STD	OPTION	
A. Shoe Width	31.5" (800 mm)	23.6" (600 mm)	27.5" (700 mm)
B. Overall Width	10' 6" (3.19 m)	9' 10" (2.99 m)	10' 2" (3.09 m)

220 X4S SPECIFICATIONS

LIFT CAPACITIES

RADIUS OF LOAD:
7’ 11” (2.40 M) ARM WITH 18’ 8” (5.70 M) BOOM WITH POWER-BOOST APPLIED

		5’ 0” (1.5 m)		10’ 0” (3.0 m)		15’ 0” (4.5 m)		20’ 0” (6.0 m)		25’ 0” (7.5 m)		30’ 0” (9.0 m)		Cap at Max. Reach	
End	**Side**	**End**	**Side**	**End**	**Side**	**End**	**Side**	**End**	**Side**	**End**	**Side**	**End**	**Side**	**End**	**Side**
+30’ 0”	**lbs**														
(9.14 m)	kg														
+25’ 0”	**lbs**													**12,800***	12,800*
(7.5 m)	kgs													5805	5805
+20’ 0”	**lbs**							**12,200***	**11,750**					**12,250***	**10,000**
(6.0 m)	kg							5,530	5,325					5,555	4,535
+15’ 0”	**lbs**					**15,150***	**15,150***	**13,100***	**11,450**					**11,950***	**8,250**
(4.5 m)	kg					6,870	6,870	5,940	5,190					5,420	3,740
+10’ 0”	**lbs**					**19,000***	**16,500**	**14,750***	**10,900**	**11,800**	**7,850**			**11,200**	**7,450**
(3.0 m)	kg					8,615	7,480	6,690	4,940	5,350	3,560			5,080	3,375
+5’ 0”	**lbs**					**22,350***	**15,450**	**16,100**	**10,400**	**11,550**	**7,600**			**10,850**	**7,150**
(1.5 m)	kg					10,135	7,005	7,300	4,715	5,235	3,445			4,920	3,240
Ground	**lbs**					**23,850***	**14,950**	**15,750**	**10,050**	**11,400**	**7,450**			**11,150**	**7,300**
Line	kg					10,815	6,780	7,140	4,555	5,170	3,375			5,055	3,310
-5’ 0”	**lbs**			**26,450***	**26,450***	**23,500***	**14,900**	**15,650**	**9,950**					**12,300**	**8,000**
(1.5 m)	kg			11,995	11,995	10,655	6,755	7,095	4,510					5,575	3,625
-10’ 0”	**lbs**			**29,350***	**29,250**	**21,250***	**15,100**	**15,450***	**10,200**					**14,700***	**9,800**
(3.0 m)	kg			13,310	13,265	9,635	6,845	7,005	4,625					6,665	4,445
-15’ 0”	**lbs**					**14,900***	**14,900***							**14,300***	**14,300***
(4.5 m)	kg					6,755	6,755							6,485	6,485

NOTES: EXCAVATOR LIFTING CAPACITIES

1) The lift capacities above are based on the ISO standard, ISO 10567:2007 -“Earthmoving Machinery – Hydraulic Excavators – Lift Capacity”
2) Lifting capacities shown should not be exceeded. The weight of all lifting accessories must be deducted from the above lifting capacities. The use of a work tool attachment point as the lift point could affect the machine lift performance.
3) Lifting capacities are based on the machine standing on a firm, uniform supporting surface. Users must make allowances for job conditions such as soft or uneven ground.
4) Lifting capacities shown do not exceed 75% of the minimum tipping loads or 87% of the hydraulic capacities. Lifting capacities marked with an asterisk (*) are limited by hydraulic capacities.
5) The least stable position is lifting over the side.
6) Operators should be fully acquainted with the Operator’s Manual & Operating Safety Booklet, furnished by LBX Company LLC before operating the machine.
7) Lift capacities apply only to the machine as originally manufactured and normally equipped by LBX Company LLC.
8) This lift chart is without bucket, bucket cylinder, and bucket linkage. If the machine is equipped with any of these components the weight of those components must be deducted from the listed lifting capacities.
9) Weight of removed components: bucket cylinder 335.8 lbs (152.3 kg) and linkage 421.1 lbs (191.0 kg).

220 X4S SPECIFICATIONS

LIFT CAPACITIES

RADIUS OF LOAD:
9’ 8” (2.94 M) ARM WITH 27’ 9” (5.70 M) BOOM WITH POWER-BOOST APPLIED

		5’ 0” (1.5 m)		10’ 0” (3.0 m)		15’ 0” (4.5 m)		20’ 0” (6.0 m)		25’ 0” (7.5 m)		30’ 0” (9.0 m)		Cap at Max. Reach	
End	**Side**	**End**	**Side**	**End**	**Side**	**End**	**Side**	**End**	**Side**	**End**	**Side**	**End**	**Side**	**End**	**Side**
+30’ 0”	**lbs**														
(9.14 m)	kg														
+25’ 0”	**lbs**							**9,100***	**9,100***					**8,950***	8,950*
(7.5 m)	kgs							4,125	4,125					4055	4055
+20’ 0”	**lbs**							**11,050***	**11,050***					**8,250***	**8,250***
(6.0 m)	kg							5,010	5,010					3,740	3,740
+15’ 0”	**lbs**							**12,150***	**11,700**	**11,550***	**8,200**			**8,100***	**7,550**
(4.5 m)	kg							5,510	5,305	5,235	3,715			3,670	3,420
+10’ 0”	**lbs**			**28,050***	**28,050***	**17,550***	**17,000**	**13,950**	**11,150**	**11,950**	**8,000**			**8,300***	**6,900**
(3.0 m)	kg			12,720	12,720	7,960	7,710	6,325	5,055	5,420	3,625			3,760	3,125
+5’ 0”	**lbs**					**21,350***	**15,800**	**15,850***	**10,600**	**11,700**	**7,700**			**8,800***	**6,650**
(1.5 m)	kg					9,680	7,165	7,185	4,805	5,305	3,490			3,990	3,015
Ground	**lbs**			**15,150***	**15,150***	**23,550***	**15,150**	**15,850**	**10,150**	**11,450**	**7,500**			**9,750***	**6,750**
Line	kg			6,870	6,870	10,680	6,870	7,185	4,600	5,190	3,400			4,420	3,060
-5’ 0”	**lbs**	**15,400***	**15,400***	**25,550***	**25,550***	**23,900***	**14,900**	**15,650**	**10,000**	**11,400**	**7,450**			**11,150**	**7,300**
(1.5 m)	kg	6,985	6,985	11,585	11,585	10,840	6,755	7,095	4,535	5,170	3,375			5,055	3,310
-10’ 0”	**lbs**	**26,500***	**26,500***	**31,900***	**29,000**	**22,400***	**15,050**	**15,750**	**10,050**					**13,250**	**8,650**
(3.0 m)	kg	12,020	12,020	14,465	13,150	10,160	6,825	7,140	4,555					6,010	3,920
-15’ 0”	**lbs**			**25,450***	**25,450***	**18,150***	**15,550**							**14,300***	**12,150**
(4.5 m)	kg			11,540	11,540	8,230	7,050							6,485	5,510

NOTES: EXCAVATOR LIFTING CAPACITIES

1) The lift capacities above are based on the ISO standard, ISO 10567:2007 -“Earthmoving Machinery – Hydraulic Excavators – Lift Capacity”
2) Lifting capacities shown should not be exceeded. The weight of all lifting accessories must be deducted from the above lifting capacities. The use of a work tool attachment point as the lift point could affect the machine lift performance.
3) Lifting capacities are based on the machine standing on a firm, uniform supporting surface. Users must make allowances for job conditions such as soft or uneven ground.
4) Lifting capacities shown do not exceed 75% of the minimum tipping loads or 87% of the hydraulic capacities. Lifting capacities marked with an asterisk (*) are limited by hydraulic capacities.
5) The least stable position is lifting over the side.
6) Operators should be fully acquainted with the Operator’s Manual & Operating Safety Booklet, furnished by LBX Company LLC before operating the machine.
7) Lift capacities apply only to the machine as originally manufactured and normally equipped by LBX Company LLC.
8) This lift chart is without bucket, bucket cylinder, and bucket linkage. If the machine is equipped with any of these components the weight of those components must be deducted from the listed lifting capacities.
9) Weight of removed components: bucket cylinder 335.8 lbs (152.3 kg) and linkage 421.1 lbs (191.0 kg).

220 X4S SPECIFICATIONS

STANDARD EQUIPMENT

ADVANCED TECHNOLOGY

- Digital Level
- Dynamic Stability Assist
- Height and Depth Alarm
- Payload

CAB

- 270° WAVES 3-Camera System
- 12V Power Outlet
- AM/FM Sound System
- Anti-Theft Device
- Auxiliary Switches on Control Lever
- Bluetooth
- Cab Air Filter - External
- Cab Handrails
- Cab Interior Light
- Cab ISO-Mounts
- LED Cab Lights
- Clear Roof Window
- Climate Control A/C and Heater
- Cup Holder (2)
- Defroster
- Digital Clock
- Emergency Exit and Hammer
- Face Vent
- Floor Mat (Split)
- Front Window One-Touch Lock
- Gate Lock Hydraulic Activation
- Horn
- Hour Meter (Digital)
- LCD 10” Color Monitor
- Maintenance Interval Reminders
- MP3 Auxiliary Input
- On-Board Diagnostic
- Radio Mute Switch
- Rear View Camera
- Rear View Mirrors (2)
- RemoteCARE Support System (GPS)
- Roof Sun Shade
- ROPS/FOPS Level 1 Certified Structure
- Safety Glass Windows
- SCM Air-Suspension Seat with Tilt & Heater
- Seat Recline
- Selectable Monitor Languages
- Small Storage
- Smart Phone Tray
- Travel Alarm with Cancel Switch
- Trip Meter (Digital)
- Wiper & Washer
- Wiper Switch on RH Joystick

ENGINE

- 85A Alternator
- Air Filter (Double Element)
- Air Filter Restriction Indicator
- Air Pre-Cleaner
- Auto Warm-Up System
- Auto-Idle
- Auto-Idle Shutdown
- Battery Disconnect Switch w/ LED Light
- Cooling Fan
- DEF Gauge on Monitor
- Diesel Particulate Filter (DPF)
- Diesel Oxidation Catalyst (DOC)
- Drain for Fuel Tank
- Dual Remote Fuel Filters with Water Separators
- EGR Coolers
- Emergency Engine Stop
- Engine Oil Sample Port
- Engine Protection Feature
- External Fuel Gauge
- External DEF Gauge
- Fan Housing
- Fuel Cooler
- Fuel Filter Restriction Indicator
- Fuel Management System
- Fuel Usage History
- Fuel Usage Monitor
- Glow Plug Pre-Heat
- Idle-Start
- Intercooler
- Neutral Start
- One-Touch Idle
- Radiator / Oil Cooler / Intercooler Protective Screens
- Remote Engine Oil Drain
- Remote Oil Filter
- Selective Catalytic Reduction (SCR)
- Turbocharger

HYDRAULICS

- Anti-drift valves (Arm & Boom)
- Arm Regeneration
- Arm Speed Assistance (2 Pump Flow)
- Attachment Cushion Valve
- Auto Swing Priority
- Custom Flow Control
- Auxiliary Tool Settings (Custom Naming)
- Auxiliary Valve
- Boom Regeneration
- Boom Speed Assistance (2 Pump Flow)
- Bucket Curl Assist
- Control Levers Pre-Wired for Auxiliary Hyd.
- Pattern Control Valve (2 way)
- Electronically Controlled Hydraulic Pumps
- Fire Wall
- Free Swing
- Hydraulic Filter Restriction Indicator
- Hydraulic Oil Sample Port
- Long Life Hydraulic Oil (5,000 Hour)
- Neutral Pump De-Stroke
- Oil Cooler
- Power Boost
- Power Save
- Pressure Reading on Monitor
- Pump Stand-By Pressure

UNDERCARRIAGE

- 800 mm shoes (31.5 in) 3-Bar Steel
- Extended Steps
- Lashing Points (Tie-Downs)
- Sealed Link Chain
- Single Track Guide
- Strutted Track Chain
- Swivel Guard

UPPERSTRUCTURE

- Counterweight (8,380 lbs)
- Center Cover (Over Main CV)
- Fuel Tank Belly Pan
- ISO Guard Rails
- LED Tool Box Light
- Lockable Fuel Cap and Service Doors
- Lockable Hydraulic Oil Tank Cap
- Lockable Engine Hood
- Lockable Tool Box

ATTACHMENT

- 9’ 8” (2.94 m) Arm
- 18’ 8” (5.70 m) HD Boom Section
- Auxiliary Pipe Brackets
- Bucket Anti Clatter
- Chrome Pins
- HD Bucket Linkage
- LED Boom Light
- Quick Coupler Lines
- Precision Grade Brackets
- Teardrop Pin Retention Keepers

220 X4S SPECIFICATIONS

OPTIONAL EQUIPMENT

CAB

- 270° WAVES+ 3-Camera System
- Cab Sun Visor (Front)
- CAB Head Guard (FOPS Level 2)
- Front Guard (Mesh)
- Front Guard (BAR - OPG Level 1)
- Front Guard (BAR - OPG Level 2)
- LED Lights for WAVES Cameras (4)
- Rain Deflector
- Vandal Cover (Front Window)

ENGINE

- Reversible Cooling Fan
- Tropical Package

HYDRAULICS

- Hose Burst Check Valve

AUXILIARY HYDRAULIC OPTIONS

- Multi-Function Aux. w/ in-cab Pressure Settings and Proportional Joystick
- Combination Aux. w/ in-cab Pressure Settings and Proportional Joystick

UNDERCARRIAGE

- 600 mm shoes (23.6 in) 3-Bar Steel
- 600 mm Rubber shoes (23.6 in)
- 700 mm shoes (27.5 in) 3-Bar Steel
- Triple Track Guards

UPPERSTRUCTURE

- Heavy Duty Counterweight (9,480 lbs)

ATTACHMENT

- 9’ 8” (2.94 m) HD Arm
- 7’ 10” (2.40 m) HD Arm

BUCKET SIZES



Scan the QR code to find the right size bucket, thumb, and coupler combination for the 220 X4S.

Or visit qrco.de/be6iqg

SCAN ME

#LBX2490 · 6/23

LBX® and Link-Belt® are registered trademarks. Copyright 2023. All rights reserved. We are constantly improving our products and therefore reserve the right to change designs and specifications.

Link-Belt EXCAVATORS