Atlas Copco Production drilling rigs

Simba L6 C

Technical specification

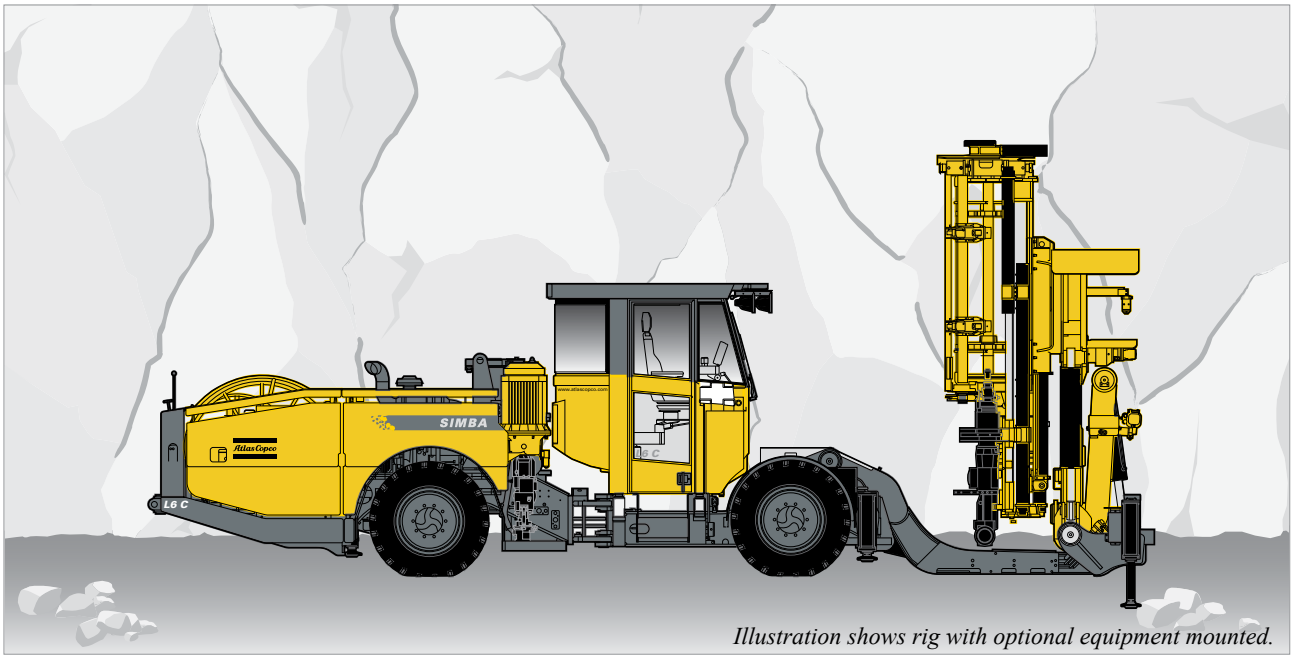

Illustration shows rig with optional equipment mounted.

Production drilling rig with tophammer rock drill. The Rig Control System (RCS) provides efficient and high precision long hole drilling, and also ensures an ergonomic working environment and longer consumable life. Ring drilling with parallel holes upwards/downwards up to 3 m apart. Hole diameter 89–127 mm.

Standard features

»Rock drill

- COP 4050 rock drills with long, slender piston and dual-damping system for shock wave absorption
- Lubricated and pressurized mating surfaces giving long service intervals
- Shank adapters suitable for the given hole range

»Drilling unit

- Mechnized rod handling system
- Feed with hydraulic two-stage cylinder
- Front- and rear-mounted stingers
- Drill steel support for guidance during collaring and as support during rod handling

»Positioning unit

- Tilt, rotation and pendulum arm
- Accurate, smooth and proportional movements
- Mine-adapted, sturdy components
- Drilling unit facing canopy

»Control system

- Rig Control System (RCS)
- Automation level: ABC Basic
- Angle reading instrument
- Rotation Pressure Controlled feed (RPCF)
- Dampening Pressure Controlled Impact (DPCI)
- Pre-set parameters for different drilling conditions

»Carrier

- Mine-adapted carrier with articulated steering and four-wheel drive
- Low-emission, turbo-charged diesel engine

»General

- Operator panel mounted under canopy
- FOPS-approved protective roof
- Electrical cable reel
- Working lights on protective roof

Specifications

ROCK DRILL

COP 4050MUX	
Shank adapter	ST58, ST68
Hole diameter	89–127 mm
Impact power	40 kW
Impact rate	40–60 Hz
Hydraulic pressure, max.	210 bar
Rotation motors	Separate rotation, 2 xOMS250
Rotation speed	0–140 rpm
Lub. air consump. (at 3 bar)	8 l/s
Water consumption	150 l/min
Weight	450 kg

FEED

BMH 200-series	BMH 244X	BMH 245X	BMH 246X
Total length with extractor	3,590 mm	3,895 mm	4,200 mm
Drill rod length	1,220 mm	1,525 mm	1,830 mm

» Drilling unit

- Rod Handling System, RHS 17 ..... 17+1 rods
- Adaptable to 4′, 5′ and 6′ rods
- Adaptable to TDS 76 and TDS 87 drill rods
- Mechanized drilling up to 32 m

» Positioning system

- Feed extension (with 4′ drill steel) ..... 900 mm
- Feed extension (with 5′and 6′ drill steel) ..... 1,200 mm
- Rotary acurator BHR 60–2 for 360º ring drilling
- I-frame with pendulum arm ..... ± 1.5 m
- Stinger backward on feed ..... BSJ 8-200
- Stinger forward on feed ..... BSJ 8-115
- Feed dump, drilling ..... +45º forward and -30º backward

» Control system

- Rig Control System (RCS) – versatile and upgradeable to a higher degree of automation
- Control panel with colour display
- PC-card for transfer of data and storage of drill parameters
- Integrated diagnostic system
- Angle reading instrument
- Drill settings for up to five different drill bits
- Exposed components are designed and tested acc. to IP 65

» Power pack

- Hydraulic pump for percussion
- Hydraulic pump for rotation, positioning, feed
- Pumps unloaded at start
- System pressure, max ..... 250 bar
- Hydraulic oil tank, volume max/min ..... 250/200 l
- Low oil level indicator and shut-down
- Oil temperature gauge on oil tank, electronically supervised
- Smart oil leakage shut-down system
- Electric oil filling pump
- Filtration, absolute ..... 16 µm
- Oil filter indicator
- Water cooled oil cooler in stainless steel
- Mineral hydraulic oil

» Electrical system

- Total installed power ..... 158 kW
- Main motors ..... 2x75 kW
- Voltage ..... 400–690 V
- Frequency ..... 50–60 Hz
- Starting method ..... star/delta (400–690 V)
- Electronic overload protection for electric motors
- Digital volt/amperage meter in electric cabinet
- Phase sequence indicator
- Earth fault indicator
- Battery charger
- Transformer ..... 8 kVA
- Working lights 4 x 80W LED 24V DC
- Cable reel

» Air system

- Screw-compressor ..... Atlas Copco GA 5
- Capacity at 5400 rpm and 7 bar ..... 20 l/s
- Air pressure gauge
- Hydraulic driven axial piston motor ..... 10 cc
- Adjustable flow/pressure

» Water system

- Hydraulic driven water booster pump
- Capacity at 15 bar boost ..... max 250 l/min
- Min water inlet pressure ..... 2 bar
- Hydraulic drive, axial piston motor ..... 10 cc
- Water pressure gauge
- Water flow guard

» Carrier

- Engine ..... Deutz TCD 2013L04 2V
- Power rating at 2,300 rpm ..... 120 kW (163 hp)
- Torque at 1,400 rpm ..... 572 Nm
- Fixed seat for tramming, including safety belt
- Articulated steering ..... ±41° steering angle
- Four-wheel drive
- FOPS-approved protective roof
- Hydrostatic power steering system
- Hydrodynamic ..... Clark 24000 transmission
- Front axle ..... DANA Spicer 123/90
- Rear axle ..... DANA Spicer 123/90, ±8º oscillation
- Automatic differential lock on front axle, limited slip
- Tyres ..... Michelin 12.00 R24 XZM
- Clearence outside axles 15º
- Hydraulic jacks, front ..... 2 extendable
- Hydraulic jacks, rear 2
- Service brakes 2 separate circuits (hydraulically applied, fully enclosed wet disc brakes)
- Emergency and parking brakes ..... SAHR
- Fuel tank, volume ..... 100 l
- Electric system ..... 24 V
- Batteries ..... 2 x 125 Ah
- Tramming lights 6x 40W LED 24V DC + 2x 70W Halogen 24V DC
- Illuminated stairs for platform
- Central lubrication system
- Silencer
- Catalyser
- Fire extinguisher
- Spirit levels
- Gradeability at max load on drive wheels 1:4
- Tramming speed on flat ground ..... >15 km/h
- Tramming speed on incline 1:8 ..... >5 km/h
- Horn
- Beacon warning lamp
- Reverse alarm

Specifications

DRILL STEEL

Rock drill	Hole diameter, mm	Drill rod	Shank adapter	Guide tube
COP 4050MUX	89–127	TDS 76	ST 58	N/A
COP 4050MUX	89–127	TDS 87	ST 68	N/A

Optional equipment

» Drilling system

- Water mist flushing, water oil cooler, external air supply
- Water mist flushing, air oil cooler, external air supply
- Rock drill lubrication surveillance system
- Hole blowing kit
- Dry drilling system

» Positioning system

- Rig alignment laser RAL 650
- Additional stinger forward on feed, BSJ 8-115 (stroke length 1,150 mm)
- Additional stinger backward on feed, BSJ 8-200 (stroke length 2,000 mm)
- Automatic lubrication for positioning/drilling system
- Central lubrication for positioning/drilling system
- Rod handling system RHS 27 (up to 51 m)
- Thread lubrication kit
- Stinger extension pieces

» Automation

- Simba ABC Regular without bit changer
- Simba ABC Total without bit changer
- Simba ABC Regular with bit changer
- Simba ABC Total with bit changer
- Drill Plan Handling
- Full Drill Data Handling
- Rig Remote Access
- Breakthrough Automatic Stop
- Text Message System
- Remote Cradle Control / Remote Feed Control
- Mine Navigation
- Void Detection

» Water system

- Water hose reel
- Water hose on reel

» Power packs

- Air-oil cooler kit
- Heater kit

» Electrical system

- Soft start for 400–700 V
- Electrical cable on reel, H07RN-F
- Electrical cable on reel, Buflex
- Plug PC4
- Plug PC5
- Socket PC4
- Socket PC5
- Switch gear
- Electrical outlet, 16 A
- Extra transformer, 15 kVA
- Extra transformer, 10 kVA
- Metal halogen working lights, 2 x 400 W
- Extra working lights, 2 x 200 W, 24 V (on tripod)
- Extra working lights, 2 x 500 W, 230 V (on tripod)
- Electrics according to local standards

» Cabin

- FOPS/ROPS approved cabin:
  - Fixed seat
  - Media player
  - Boot washing kit
  - Air conditioning unit without heating
- Stainless steel cabin
- Air conditioner with heating
- Front window, 24 mm
- Swingable operators seat
- FOPS-approved grizzly bar for front window
- Cabin lift/tilt system, 375 mm/15º
- Reversing camera with monitor
- Joystick controlled spotlight

» Carrier

- Fire suppression system, manual
- Fire suppression system, automatic (check-fire)
- Fire suppression system, full automatic
- Particle filter UNIKAT
- Brake lights
- L-carrier
- Solid tyres
- Deutz TCD 2013 L06 2V, 175 kW (238 hp)

» Miscellaneous

- Manual rig washing kit
- Manual lubrication kit
- Hose and cable guide at water/cable reel
- Link-one parts book
- Remote operating kit
- Special paint
- Bit changer
- Additional panel
- Manual spotlight

Measurements

SIDE VIEW

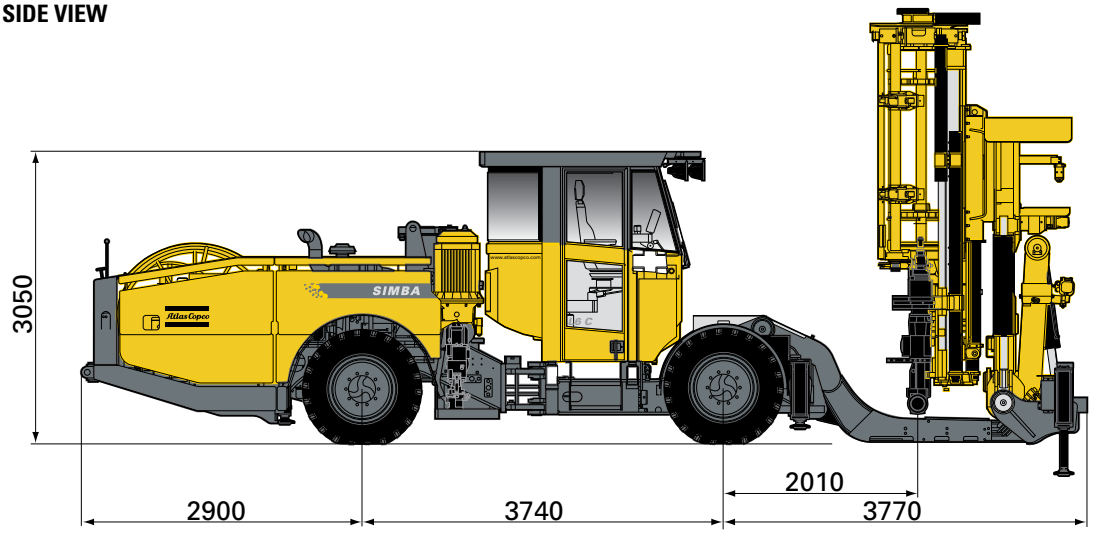

Illustration shows rig with optional equipment mounted.

COVERAGE AREA

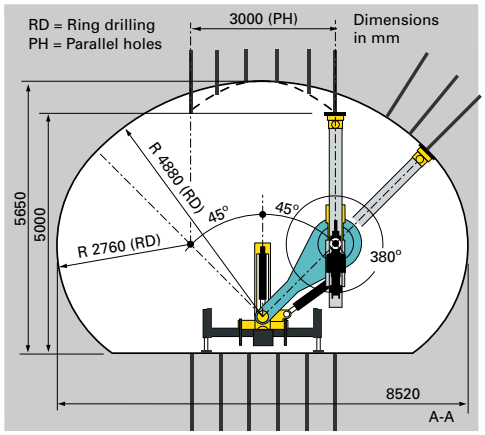

L6

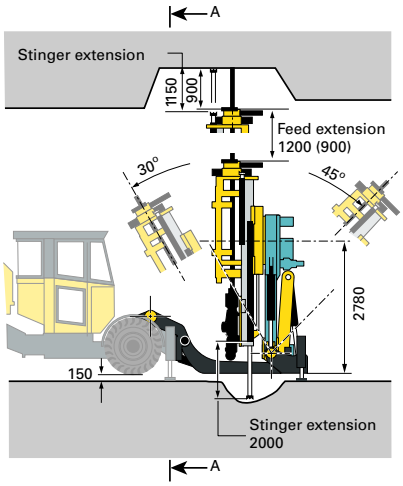

TURNING RADIUS

depending on surface		
mm	Outer	6,300
	Inner	3,800

DIMENSIONS

mm	Width	2,210
	Height tramming	3,200
	Height roof up	2,945
	Length tramming	10,500
	Ground clearance	205

WEIGHT

gross weight		
kg	Total	24,500
	Boom side	16,000
	Engine side	8,500

RECOMMENDED CABLE SIZE AND LENGTH

Voltage	Type	Dimension, mm²	Diameter, mm	Length, m
400 V	H07RN-F	4G150	67	60
440 V	H07RN-F	4G120	60	75
440 V	Buflex	3x150+3G35	52	100
460–500 V	H07RN-F	4G120	60	75
460–500 V	Buflex	3x150+3G25	52	100
500–550 V	H07RN-F	4G95	55	90
500–550 V	Buflex	3x120+3G25	46	135
660–700 V	H07RN-F	4G70	49	110
660–700 V	Buflex	3x95+3G16	42	155
1,000 V	Buflex	3x50+3G10	32	275

G = Protection yellow/green
Recommendations are given for surrounding temperature of 30°C.

© Copyright 2010, Atlas Copco Rock Drills AB, Örebro, Sweden. All product names in this publication are trademarks of Atlas Copco. Any unauthorized use or copying of the contents or any part thereof is prohibited. Illustrations and photos in this brochure may show equipment with optional extras. Specifications and equipment are subjects to change without notice. Consult your Atlas Copco Customer Center for specific information.

9851 2199 01c 04/2013