Utilift MF 540

Technical data sheet
100019818
29.08.2011

McDowell Since 1968

2018 Kingsway Blvd.
Sudbury, Ontario, Canada P3B 4J8
Tel: +1 (705) 566-8190
www.bmcdowell.com
sales@bmcdowell.com



Pictured machine may include options and additional equipment.

Features

The Utilift MF 540 Scissor Lift with lifting capacity up to 4,5 tonnes is designed to provide a safe work platform for all kinds of installation works in tunnels up to 6,5 m (21 feet) high.

Typical applications are fan installations, ventilation ducting, electrification works and piping for air and water services. Four platform sizes with side shift provide complete drift coverage from single setup practically in all kinds of mine headings. The works can be accomplished safely, efficiently and comfortably from the level work deck, elevated to a optimum work height. Optional remote drive system from the deck brings fully new type efficiency into installation and assembly works in underground mines.

The powerful liquid cooled turbo charged Deutz 120 kW or MB 110 kW TIER 3 approved engine provides clean and efficient operation and gives maximum speed of 9 km/h in upward inclined 1:7 tunnel. In horizontal tunnel the maximum speed is 25 km/h.

The FOPS and ROPS approved safety cabin provides superior visibility and comfortable compartment for the driver and his assistant. All daily checks and service functions can be done from the ground level.

Normet reserves the right to change this specification without further notice.

Utilift MF 540

Technical data sheet
100019818
29.08.2011

Technical specification

LIFTING PLATFORM

Dimensions 2000 X 4000 mm
Lifting capacity 4500 kg
Max. Lifting height 4500 mm
Side shifting 550 mm
Tilt +/-8°
Diesel start/stop from platform
Battery operated emergency pump

ENGINE

Liquid cooled turbo charged Deutz TCD 2013 L4,
120 kW/2300 rpm, TIER 3 approved

EXHAUST SYSTEM

Catalytic exhaust gas purifier and muffler

TRANSMISSION

Dana 24 000 series power shift with pump drive group
3 speeds forward and reverse
4-wheel drive

AXLES

Planetary type
Dana 123
Load end axle fixed
Engine end axle oscillation +/- 10°

TYRES

12.00 - 20 PR 20

PERFORMANCE

1st gear max.	6 km/h
2nd gear	12 km/h
3rd gear	25 km/h
Max. tractive effort	133 kN
Max speed in 1:7 inclined tunnel	9 km/h
Performance curve	100018584

BRAKES

Service brake: hydraulically powered dual-circuit oil immersed multidisc brakes in both axles

Safety/Parking brake: spring applied hydraulically released fail-safe -type brake. Brake testing possible from cabin

STEERING

Hydraulic frame steering
Orbitrol type
Frame articulation +/- 40°

FUEL TANK

Capacity 112 L

HYDRAULIC SYSTEM

Variable displacement pump system,
190 bar, 95 L/min/2200 rpm
Hydraulic oil tank capacity 115 L
Return oil filtration 10 µm
Indication of level, filtration and temperature

24 VDC ELECTRICAL SYSTEM

Exposed components are min IP 65 standard
Battery 2 x 115 Ah
Alternator 100 A
Driving halogen lights (4 + 2 pcs) 70 W
Working halogen lights (2 + 2 pcs) 70 W
Working halogen lights on lifting platform (4 pcs) 70 W
LED parking, brake and indicator lights
LED side lights; amber
Side reversing halogen lights 70 W
Rotating beacon; amber
Wire harness (self extinguishing) with tinned wires and water tight conduits

DRIVER'S COMPARTMENT

Open 2-man cabin FOPS/ROPS approved
Air suspended driver's seat
Seat with retractable lap seat belt
Forward and side seating for the driver with two sets of pedals (brake and accelerator)
CANCockpit, Master Gauge:

- Tacho, rpm
- Operating hours
- Fuel level
- Transmission temperature
- Cooling water temperature

GREASING SYSTEM

Centralized grease fittings for the carrier

OTHER

12 kg hand held fire extinguisher
Standard symbol labels
Support legs at the load end
Support legs at the engine end

Normet reserves the right to change this specification without further notice.

Normet Oy
Ahmolantie 6
FI-74510 IISALMI, FINLAND

Tel +358 (0) 17 83 241
Fax +358 (0) 17 823 606
info@normet.fi

Optional equipment

LIFTING PLATFORMS

2400 X 4000:
- Side shifting 650 mm
- Lifting capacity 4500 kg
- Tilt +/- 8°

Turning radius:
- Outer 6660 mm
- Inner 3700 mm

2400 X 5200:
- Side shifting 650 mm
- Lifting capacity 4000 kg
- Tilt +/- 8°

Turning radius:
- Outer 7200 mm
- Inner 3700 mm

DRIVER'S CABIN

Enclosed cabin
Air suspended T-back seat for driver and passenger

ENGINE

Liquid cooled turbo charged Mercedes-Benz OM 904 LA, 110 kW/2200 rpm, TIER 3 approved

1st gear max.	6 km/h
2nd gear	13 km/h
3rd gear	25 km/h
Max. tractive effort	120 kN
Max speed in 1:7 inclined tunnel:	11 km/h
Performance curve	4800030

Air cooled Deutz D914 L06 86,5 kW / 2300 rpm TIER 3 approved
Air cooled Deutz TCD 914 L06 120 kW / 2300 rpm TIER 3 approved

EXHAUST SYSTEM

For Deutz TCD 2013 L4 120 kW

OTHER

Xenon working lights on cabin (2 + 2 pcs) 35 W
LED driving lights (4 + 2 pcs) 18 W
LED working lights on cabin (2 + 2 pcs) 43 W
LED working lights on work platform (4 pcs) 18 W
Warning lights, 1 unit:
- Rotating beacon; red
- Rotating beacon; blue

Additional equipment

FOR LIFTING PLATFORMS

Hydraulic pipe jacks:
Lifting height from platform floor 1150 mm - 1750 mm
Hydraulic pipe jacks with tilt:
Lifting height from platform floor 1370 mm - 1820 mm
Tilt +23°...+45°
Crane:
- Lifting capacity 12 kNm
- Max lifting height 5.8 m
- Max platform capacity with crane 3000 kg
- Max platform capacity 2100 kg, with 900 kg rated loading of the crane
- Crane only available with 2400 x 5200 platform

Grapple for crane
- Radio remote control
- Rotator for grapple

FOR ENCLOSED CABIN

CD/Radio system
Cabin ventilation:
- Cabin heating
- Air conditioning

SAFETY ROOF FOR PLATFORM

Sliding safety roof, (FOPS - approved)
Rear safety roof (FOPS - not approved)

FIRE SUPPRESSION SYSTEM

Fogmaker: Manually actuated
Fogmaker: Automatically actuated
Ansul: Manually actuated
Ansul: Automatically actuated
Tempus: Manually actuated

GREASING SYSTEM

Automatic lubrication system for carrier and lifter: Lincoln

OTHER

Fast fuel filling system: Wiggins
Extra hand held fire extinguisher (12 kg)
Warning lights, 1 unit:
- Rotating beacon; amber
- Rotating beacon; red
- Rotating beacon; blue
- Strobe light; white

Text labels in: Fin / Por /GB / Swe / Rus / Nor / Ger / Fra / Esp / Ita
Electro-hydraulic power pack for lifter
Toolbox and maintenance tools
2 wheel chocks with brackets
Reversing camera
Spare wheel

Normet reserves the right to change this specification without further notice.

Normet Oy
Ahmolantie 6
FI-74510 IISALMI, FINLAND

Tel +358 (0) 17 83 241
Fax +358 (0) 17 823 606
info@normet.fi

LTC services

SPARE PARTS

Spare parts package A: Available for 1000 h of use*. Include periodical service, most common wearing parts and most critical safety parts.
Spare parts package B: Available for 3000 h of use*. Include periodical service, most common wearing parts and most critical safety parts.
* Recommendations are based on average hours - can vary a lot depending on work site conditions.

TRAINING SERVICES

Available before delivery, at start up and after delivery
Product training:
Operation and Maintenance
NorSmart
Foundation of electrics, hydraulics and mechanics
Audit
Process training:
Concrete spraying
Charging
Process audit

AUDIT SERVICES

To improve performance of the machines
To improve the performance of your processes
To help improve the quality of maintenance operations

SERVICE CONTRACTS

Spare parts supply programmes
Scheduled inspection programmes
Supervision programmes
Periodic maintenance programmes
Machine usage programmes

LINK ONE

Link One electronic spare part manuals

WARRANTY SERVICES

Extended warranty

Normet reserves the right to change this specification without further notice.

Normet Oy
Ahmolantie 6
FI-74510 IISALMI, FINLAND

Tel +358 (0) 17 83 241
Fax +358 (0) 17 823 606
info@normet.fi

Dimensions

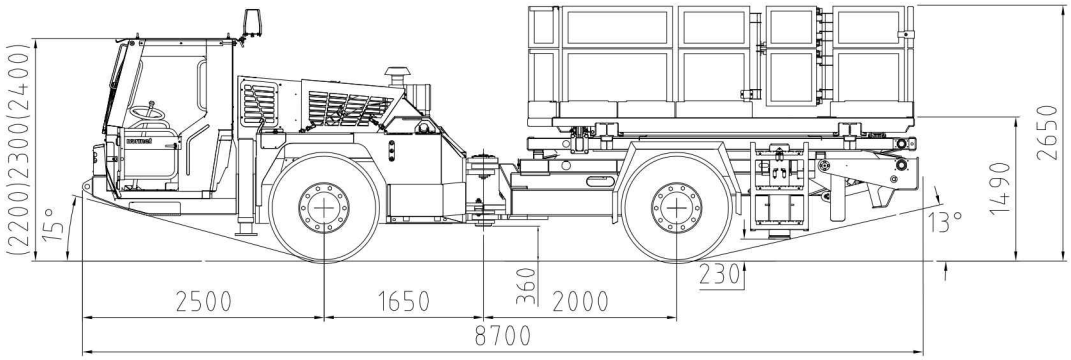

SIDE VIEW

Basic machine.

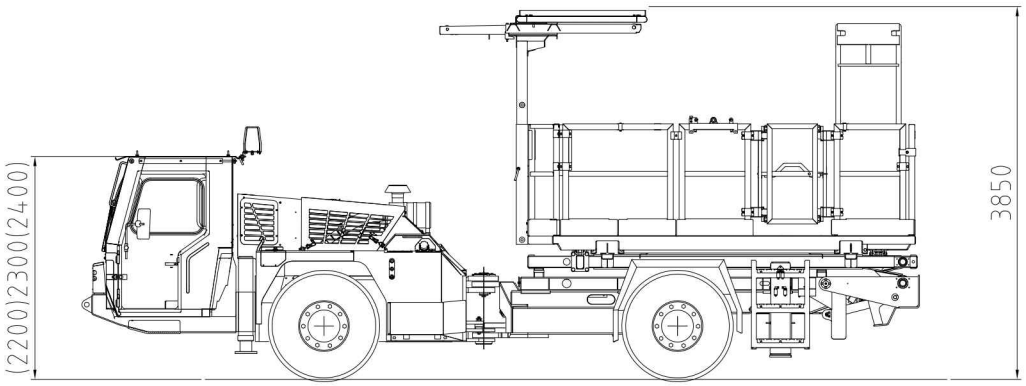

SIDE VIEW

Machine with options and enclosed cabin

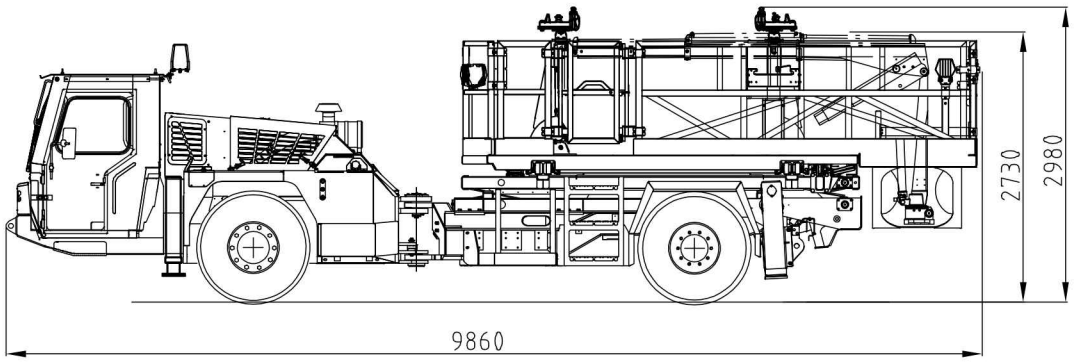

SIDE VIEW

Machine with 2400X5200 platform, crane and pipe lifters

Normet reserves the right to change this specification without further notice.

Utilift MF 540

Technical data sheet
100019818
29.08.2011

Dimensions

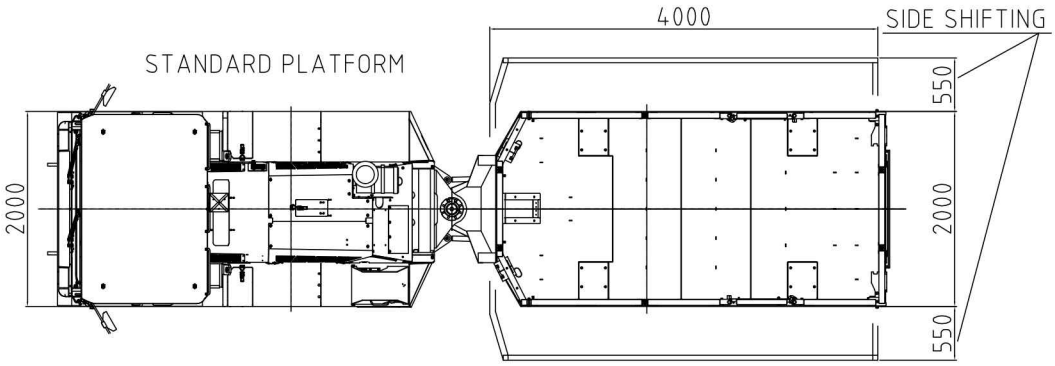

TOP VIEW
Basic machine

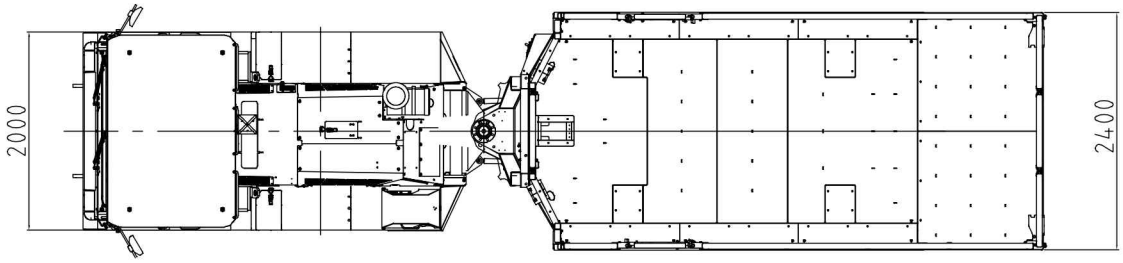

TOP VIEW
With 2400X5200 platform

DIMENSIONS	
Length	8700 mm
Width	2000 mm
Height	(+/- 100 mm) 2650 mm
Wheel base	3650 mm
Track	1650 mm
Ground clearance as shown	230 mm

TURNING RADIUS	
Outer	6550 mm
Inner	3900 mm

WEIGHT	
Operating	12 900 kg

Normet reserves the right to change this specification without further notice.

Normet Oy
Ahmolantie 6
FI-74510 IISALMI, FINLAND

Tel +358 (0) 17 83 241
Fax +358 (0) 17 823 606
info@normet.fi

Dimensions

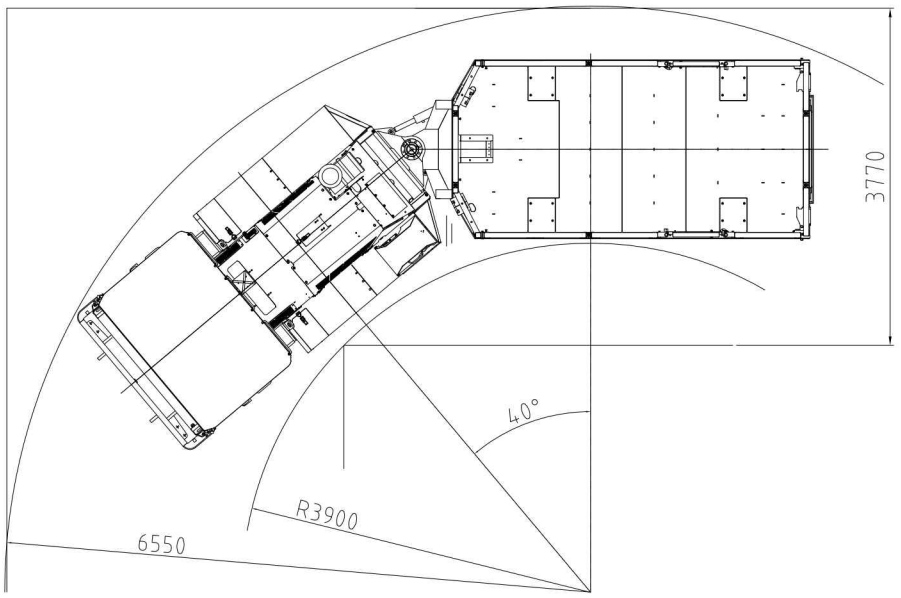

TURNING RADIUS
Basic machine

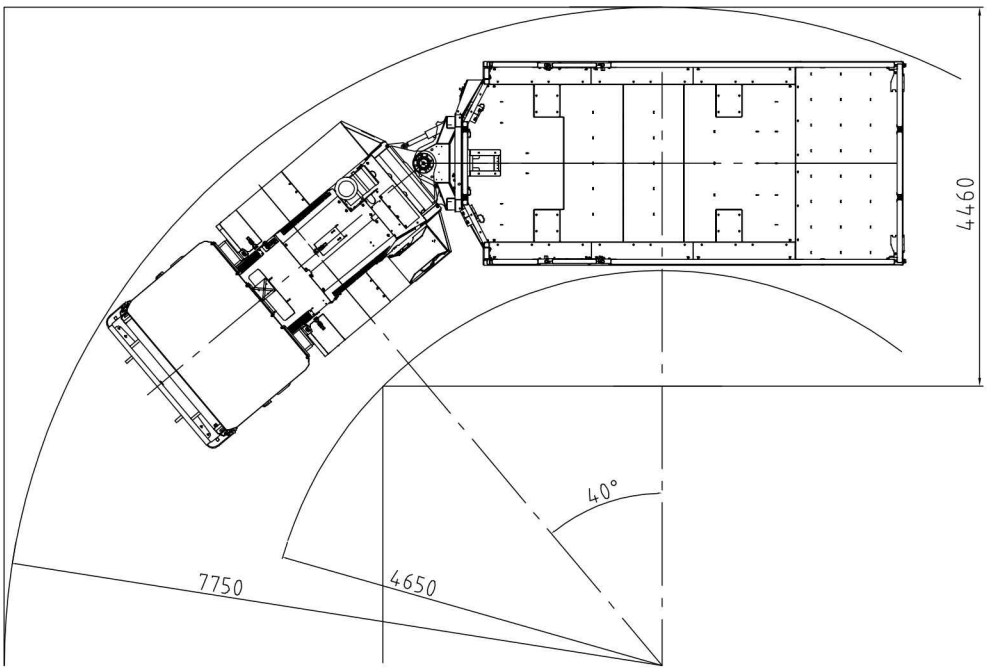

TURNING RADIUS
Machine with 2400X5200 platform

Normet reserves the right to change this specification without further notice.

Normet Oy
Ahmolantie 6
FI-74510 IISALMI, FINLAND

Tel +358 (0) 17 83 241
Fax +358 (0) 17 823 606
info@normet.fi

Dimensions

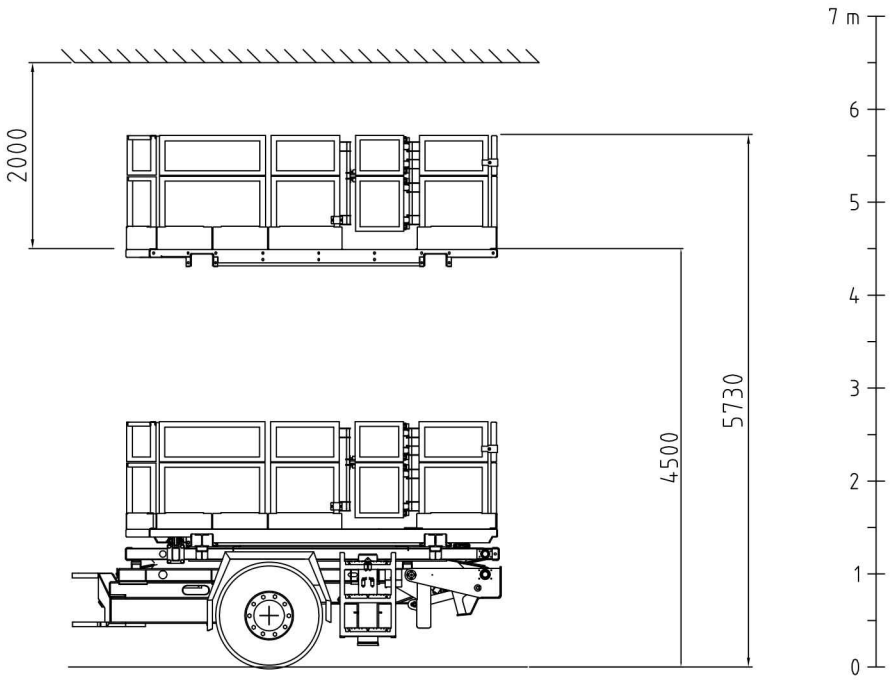

LIFTING HEIGHT

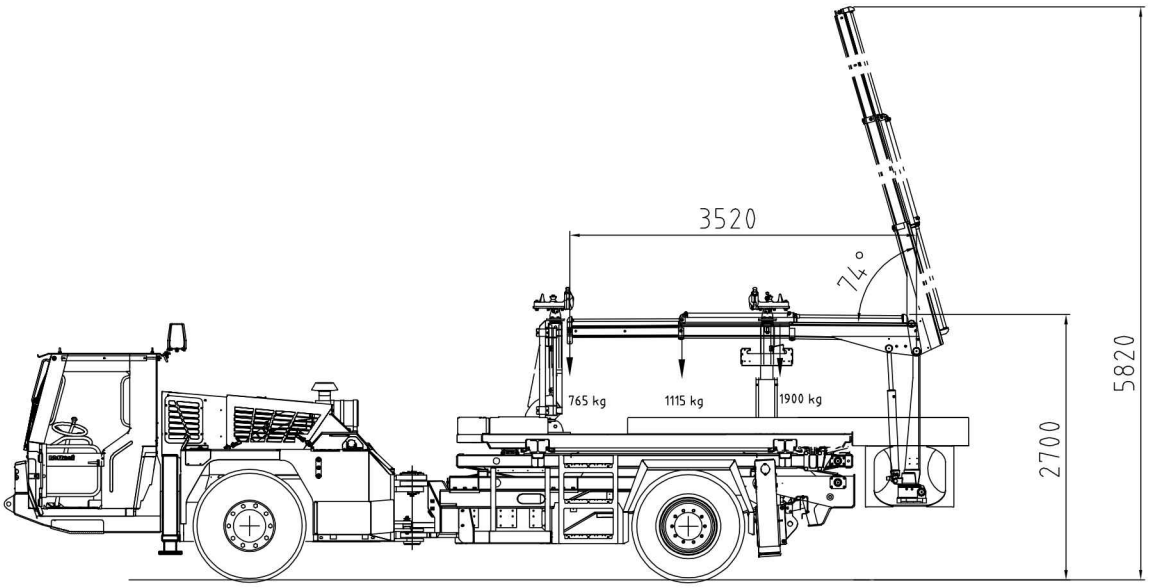

CRANE REACH

Normet Oy
Ahmolantie 6
FI-74510 IISALMI, FINLAND

Tel +358 (0) 17 83 241
Fax +358 (0) 17 823 606
info@normet.fi

Tractive efforts

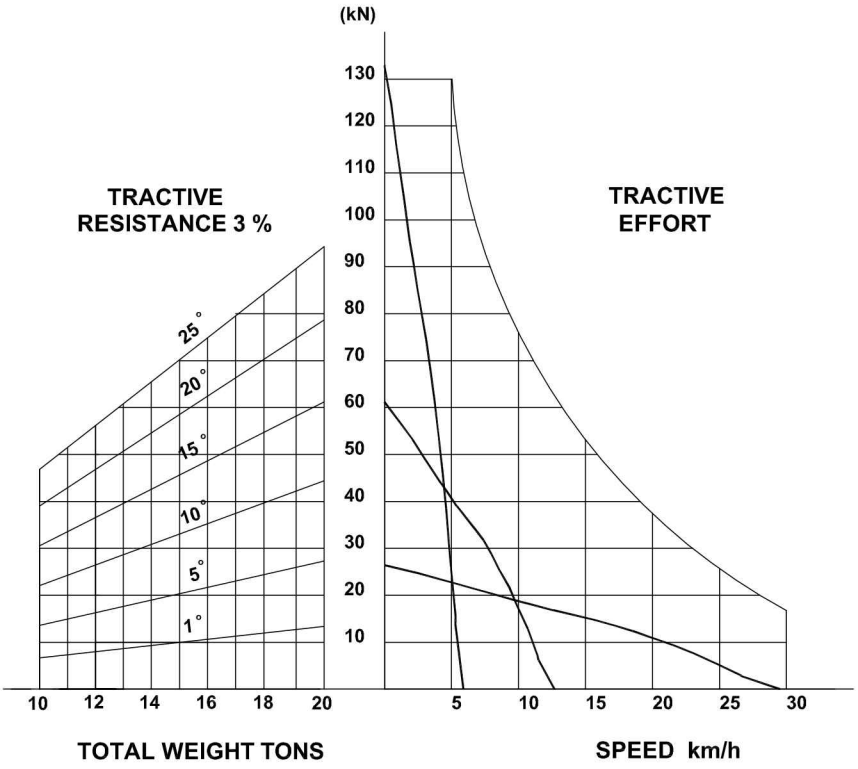

DEUTZ TCD 2013 L4 120 kW
Performance curve 100018584

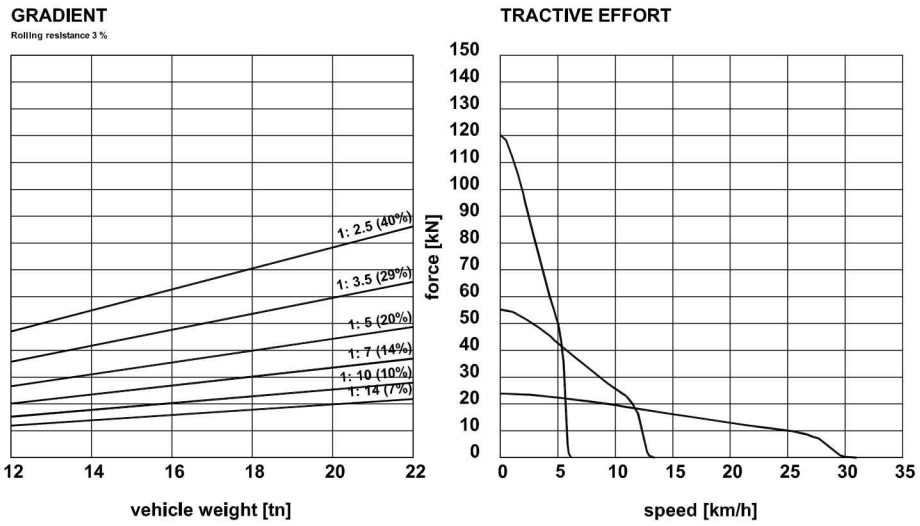

MERCEDES-BENZ OM 904 LA 110 kW
Performance curve 4800030

Normet reserves the right to change this specification without further notice.