Minetruck MT42

Underground truck with 42-tonne load capacity

Epiroc



Superior underground haulage

Minetruck MT42 is a high speed, 42-metric tonne articulated underground truck, featuring state-of-the-art levels of safety, serviceability and operator comfort which results in unmatched performance in underground mining and construction operation.

Main benefits

Safety first Minetruck MT42 is an articulated underground truck, designed with workers wellbeing as a primary concern

Maximum productivity thanks to the high capacity in a small envelope, front axle suspension and Epiroc Rig Control System, (RCS)

First-class working environment through an ergonomic design of the operator´s cabin combined with front axle suspension system

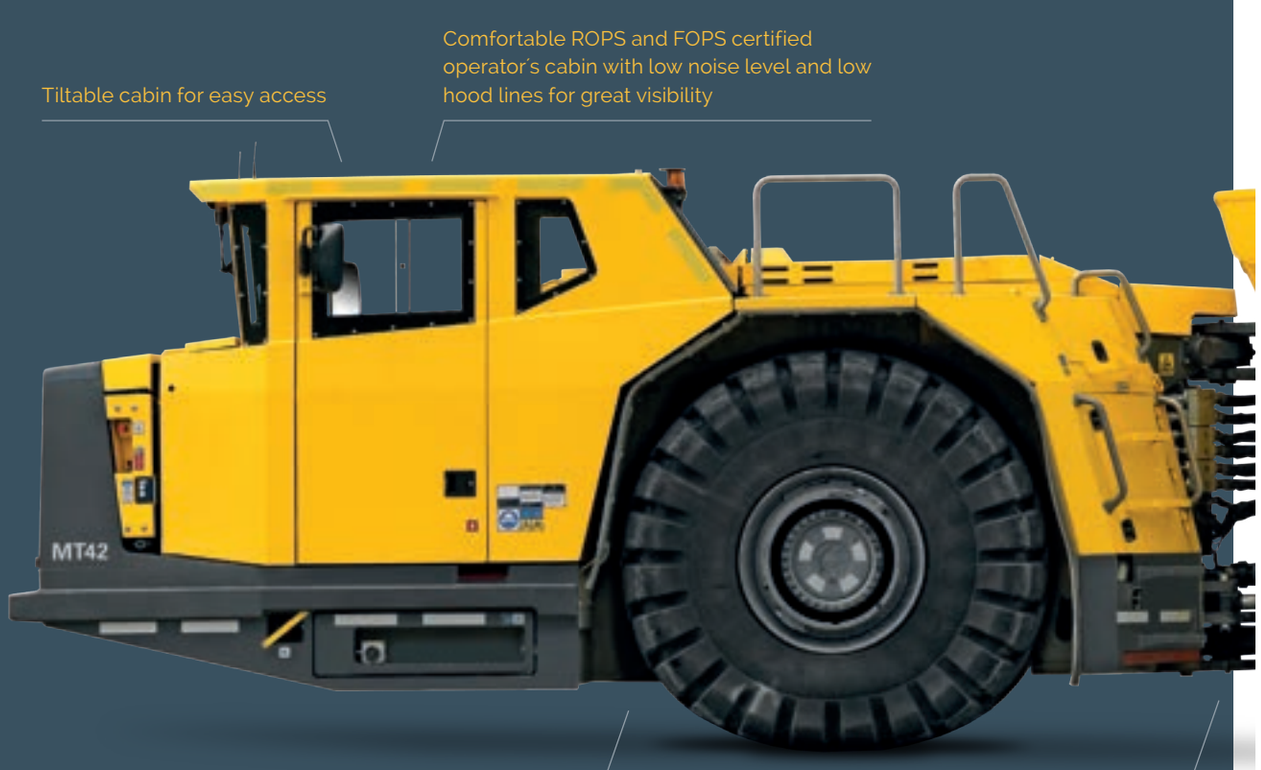



Available engine alternative are the EPA Tier 4 final and EU stage 4 approved Cummins QSx15 (for markets with ultra low sulphur diesel and low ash engine oil).



The smart, hydraulically operated tailgate works as a spill guard and supports the filling process with one extra side in the box.



In applications with a high degree of downhill tramming, the retarder, integrated in the control system, provides wear-free braking and retardation via electro-magnetic induction.



* Optional equipment

Features

Safety

- Spring applied, hydraulically released brakes (SAHR)
- Automatic brake-test logging
- Excellent visibility with low hood design
- Rear-view camera
- Heated rear view mirrors
- Oil-free operator's cabin
- 3 point contact for entry and exit from operator's
- Box up stand, articulation lock and cabin tilt stand for safe work on the machine

Comfort

- Ergonomically and spacious cabin with focus on safety and reduced operator fatigue
- Front axle suspension system
- Low noise level in cabin
- A durable air suspension seat with 3-point seat belt
- Simple, clear, multi-functional display
- Instructor's seat

Durability

- Proven powertrain components
- On board diagnostics with machine status
- Machine protection system

Productivity

- A high speed, 42-tonne articulated truck with front axle suspension
- Torque converter with automatic lock up
- Box design with high strength steel, optimized geometry and smart tailgate
- Teletram dump box (ejector stye) available as an option

Serviceability

- Easy access to service points, filters and valve blocks
- Epiroc Rig Control System (RCS) provides service information and diagnostics
- Cabin is tiltable for easy access to engine compartment
- Filter monitoring for air, hydraulic and transmission filters
- Automatic lubrication system with low level warning and lube fault detection for all daily lube points



Specifications

Capacities	
Tramming capacity	42 000 kg
Standard box volume (SAE heaped)	19.0 m3
Motion times	
Dumping	13 sec
Weights (standard equipped vehicle, empty weight)	
Approximate weight	34 500 kg
Front axle load	25 740 kg
Rear axle load	8 760 kg

Engine

	Standard	Alternative *
Brand/model: Cummins QSX15	EPA Tier 3/EU Stage IIIA	EPA Tier 4 final /EU Stage IV
Power rating at 2 100 rpm	388 kW/520 hp	399 kW/535hp
Maximum torque at 1 400 rpm	2 365 Nm	2 644 Nm
MSHA Part 7 ventilation rate	538 m3/min	538 m^3/min
MSHA Part 7 particulate index	595 m3/min	14 m^3/min

Standard: Dry type air filter, catalytic purifier and silencer, exhaust heat protection, cooling package with tube type radiator, remote engine oil and cooling fuel drain.
Alternative: Different engine, coolers, different aftertreatment system (dry type air filter, SCR, DPF, Diesel emission fluid system with separate tank/fill point including dosing pump and hoses/cables).
*Please note! Requires ultra low sulphur diesel and low ash engine oil.

Transmission and torque converter

Dana: 8822H with 8 forward and 2 reverse gears	●
Dana: CL8000 with automatic lock-up	●

Axles

Kessler: modell 102	●
Differentials: front, open	●
Differentials: rear, open	●

Brakes

Fully enclosed, force-cooled, multiple wet discs at each wheel end	●
Service/parking/emergency: SAHR	●
Engine compression brake	●
Electric brake release pump	●
Brake apply after 3 sec in neutral	●

Enclosed operator's cabin

ISO ROPS and FOPS certified	●
Air suspended seat with 3 point retractable seat belt	●
Trainer seat	●
Interactive display module	●
Automatic climate control (air conditioner, heater and pressurizer)	●
External sound level according to ISO 6393 LwA 118 dB(A)	●
Sound level in cabin according to ISO 6394 LpA 80 dB(A)	●
Whole body vibration value below EN 14253 A(8)w maximum 0.55+/-0.2m/s^2	●
Sliding window on door	●
Audio media player	

Electrical system

Voltage, system start and accessories: 24 V	●
Mine duty high output alternator: 140 Amps	●
Isolation switch lockout	●
Audiovisual back-up alarm	●
3x emergency stop buttons with fuel shut-off valve	●
Tail and brake lights	●
Side lights	●

Technical specifications

● = Standard ○ = Option

Electrical system

Front and rear turn signals	●
Hydraulic warning system, low level	●
Rear-view camera	●
Detacheable service light	●
Machine status indicator lights	●
Amber strobe light - power on	●
Neutral brake apply	●
Loading camera and load lights	○
Driving lights LED: 13x40 W	●

Hydraulic system

System pressure: 21.5 MPa	●
Hydraulic tank capacity: 220 liters	●
Filtration, return line: 12 µm	●
Heavy duty gear pumps	●
Electric hydraulic oil fill pump	●
Automatic lubrication system with timer (Lincoln pump)	●
Chrome plated stems on cylinders	●

Fuel

Fuel tank capacity: 580 liters	●
Fuel filtration: 7 µm	●
Anti-siphon fuel supply	●

Tires*

Tubeless, (treaded) for underground mine service	●
Tire dimensions: 29.5R25	●

* As applications and conditions vary, Epiroc recommends that the user consult tire suppliers for optimum tire selection.

Suspension

The suspension is a gas-hydraulic system for improved operator comfort and vehicle handling while minimizing frame stress	
Suspension, maximum travel: 140 mm	●

System

Ansul checkfire® automatic fire suppression	○
Ansul dual bottle fire supression with engine shut down	○
Handheld fire extinguisher, 2x6 kg	○
Wiggins central service points - engine, transmission, hydraulics, radiator	○
Wiggins fast fuel fill	○
Emergency steering (required for CE)	○
Blockout gears	○
Certiq - telematics system*	○
Low ambient temperature package	○
Load weighing production data, weight per box, number of boxes and accumulated payload)	○

*Certain country restriction may exist

Drive train

Corrosion-resistant radiator	○
Retarder, Telma, integrated into control system	○
Machine protection system	○

Main frame

Teletram dump box* (ejector style), fit same load frame as std dump box	○
Box up support stand, articulation safety lock and cabin tilt stand	●
Wheel chocks and brackets	●
Foldable guard rails	○

*Teletram dump box changes dumping method and vehicle dimensions (consult with your local customer center).

Parts and service

Preventive maintenance kits	○
Repair and rebuild kits	○
Face mechanic's tool set	○
Shop mechanic's tool set	○
Service tools for Epiroc Rig Control System (RCS)	○

Technical specifications

Grade performance*

Standard configuration, box empty												
%	Grade	0.0	2.0	4.0	6.0	8.3	10.0	12.5	14.3	16.0	18.0	20.0
Ratio	Grade	–	–	–	–	1:12	1:10	1:8	1:7	–	–	1:5
Km/h	1st gear	5.8	5.7	5.7	5.7	5.7	5.7	5.7	5.7	5.7	5.6	5.6
	2nd gear	7.6	7.5	7.5	7.5	7.5	7.5	7.5	7.4	7.4	7.4	7.4
	3rd gear	10.3	10.3	10.3	10.2	10.2	10.2	10.1	10.0	10.0	10.0	9.9
	4th gear	13.6	13.5	13.5	13.4	13.3	13.3	13.2	13.1	13.0	13.0	12.7
	5th gear	18.1	18.0	17.9	17.8	17.7	17.6	17.4	17.0	16.2	15.3	13.6
	6th gear	23.8	23.6	23.5	23.3	23.1	22.4	20.9	18.7	–	–	–
	7th gear	32.3	31.9	31.6	31.2	28.4	23.6	–	–	–	–	–
	8th gear	42.4	41.8	40.7	35.9	–	–	–	–	–	–	–
Standard configuration, box loaded												
%	Grade	0.0	2.0	4.0	6.0	8.3	10.0	12.5	14.3	16.0	18.0	20.0
Ratio	Grade	–	–	–	–	1:12	1:10	1:8	1:7	–	–	1:5
Km/h	1st gear	5.7	5.7	5.7	5.7	5.6	5.6	5.5	5.5	5.5	5.5	5.5
	2nd gear	7.5	7.5	7.4	7.4	7.4	7.3	7.3	7.2	7.0	6.7	6.4
	3rd gear	10.3	10.2	10.1	10.0	9.9	9.9	9.1	8.6	6.8	–	–
	4th gear	13.5	13.3	13.2	13.1	12.3	11.3	–	–	–	–	–
	5th gear	17.9	17.7	17.4	15.8	–	–	–	–	–	–	–
	6th gear	23.5	23.1	20.6	–	–	–	–	–	–	–	–
	7th gear	31.6	28.4	–	–	–	–	–	–	–	–	–
	8th gear	41.3	–	–	–	–	–	–	–	–	–	–

*These are theoretical calculations and should be seen as a reference only. 3% rolling resistance assumed. Actual performance may vary depending on the application. Continuous operation is recommended on maximum 1:7 grade.



● = Standard ○ = Option

Measurements

Dimensions

- All dimensions are shown in millimetres
- All dimensions shown are based on standard vehicle configuration with 30 mm tire deflection, unloaded

Turning radius

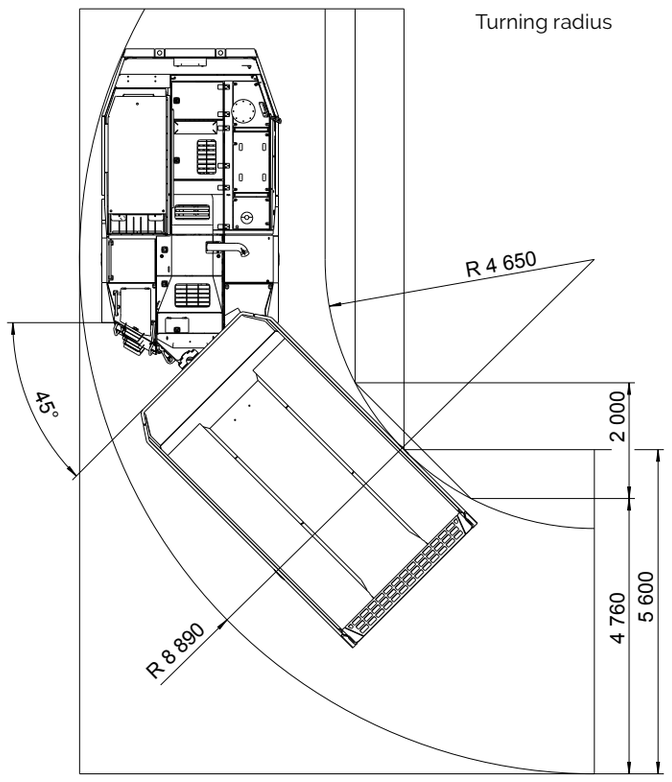

Side view

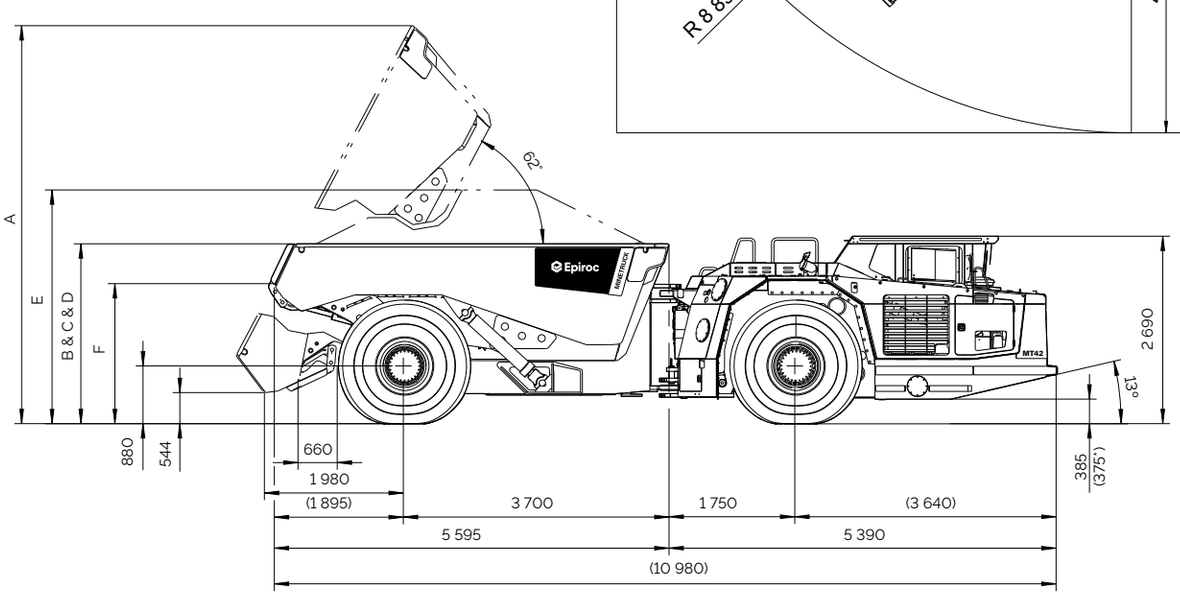

Dump boxes

Dump boxes with tailgate			STD			Teletram box (ejector style)*
Volume, SAE heaped 2:1 (m3)	23	21	19	17.5	16	15.8
Volume SAE struck (m3)	19.3	17.1	15	13.1	11.8	14
Material density (t/m3)	1.8	2.0	2.2	2.4	2.6	2.2
Dump height (mm), A	5 835	5 730	5 625	5 625	5 625	n/a
Spill guard height (mm), B	2 885	2 733	2 585	2 585	2 585	2 815
Load height (mm), C	2 885	2 733	2 585	2 460	2 460	2 685
Tailgate height (mm), D	2 575	2 575	2 585	2 460	2 460	2 175
Height loaded heaped, (mm), E	3 560	3 410	3 260	3 135	3 135	3 305
Height rear end of box (mm), F	2 030	2 030	2 030	2 030	2 030	–
Width outside (mm), W1	3 050	3 050	3 050	3 050	3 050	3 050
Width inside box (mm), W2	2 865	2 865	2 865	2 865	2 865	–

*Teletram box has a different functionality, reduced capacity, different dimensions affecting turning radius etc., more sizes can be available, please consult Epiroc for more information.



9869 0058 01 2018-05 Örebro, Sweden. Legal Notice © Copyright 2017, Epiroc Rock Drills AB. Örebro, Sweden. Any unauthorized use or copying of the contents or any part thereof is prohibited. Illustrations and photos may show equipment with optional extras. No warranty is made regarding specifications or otherwise. Specifications and equipment are subject to change without notice. Consult your Epiroc Customer Center for specific information.

United in performance. Inspired by innovation.

Performance unites us, innovation inspires us, and commitment drives us to keep moving forward. Count on Epiroc to deliver the solutions you need to succeed today and the technology to lead tomorrow.
epiroc.com

Epiroc