1-705-566-8190
marketing@bmcdowell.com

Since 1968
McDowell

TORO 40

TECHNICAL SPECIFICATION
T0040-3

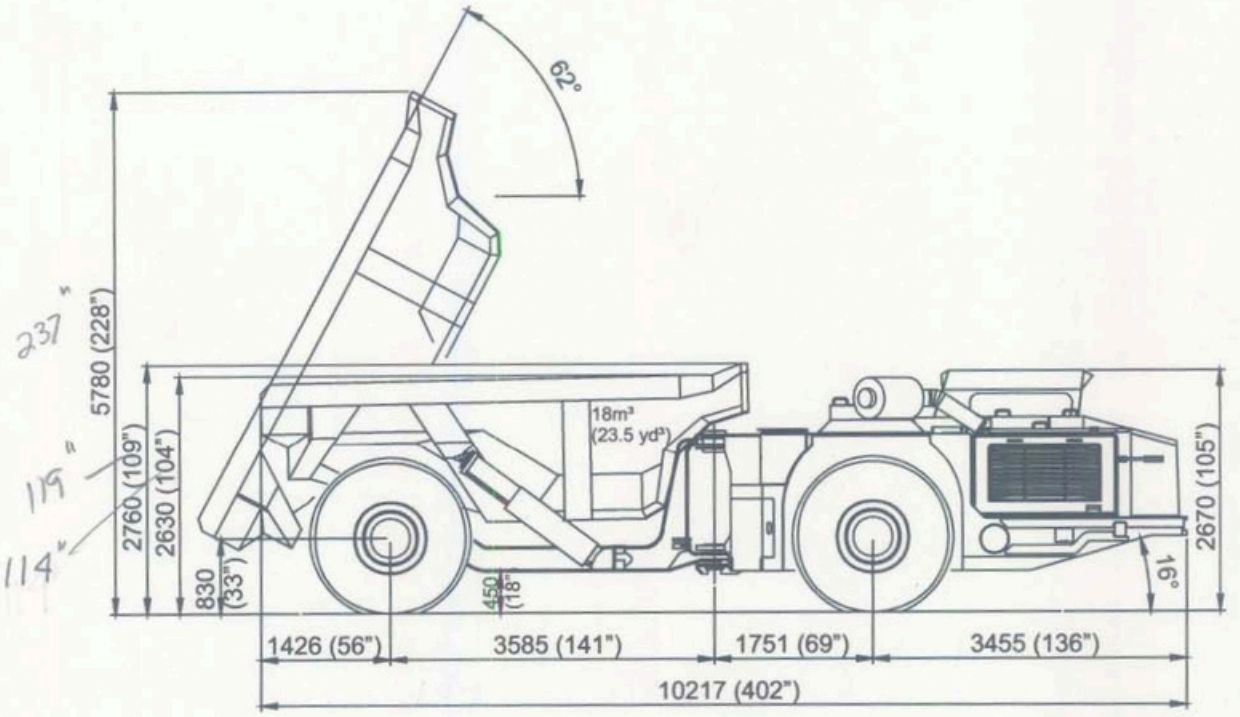

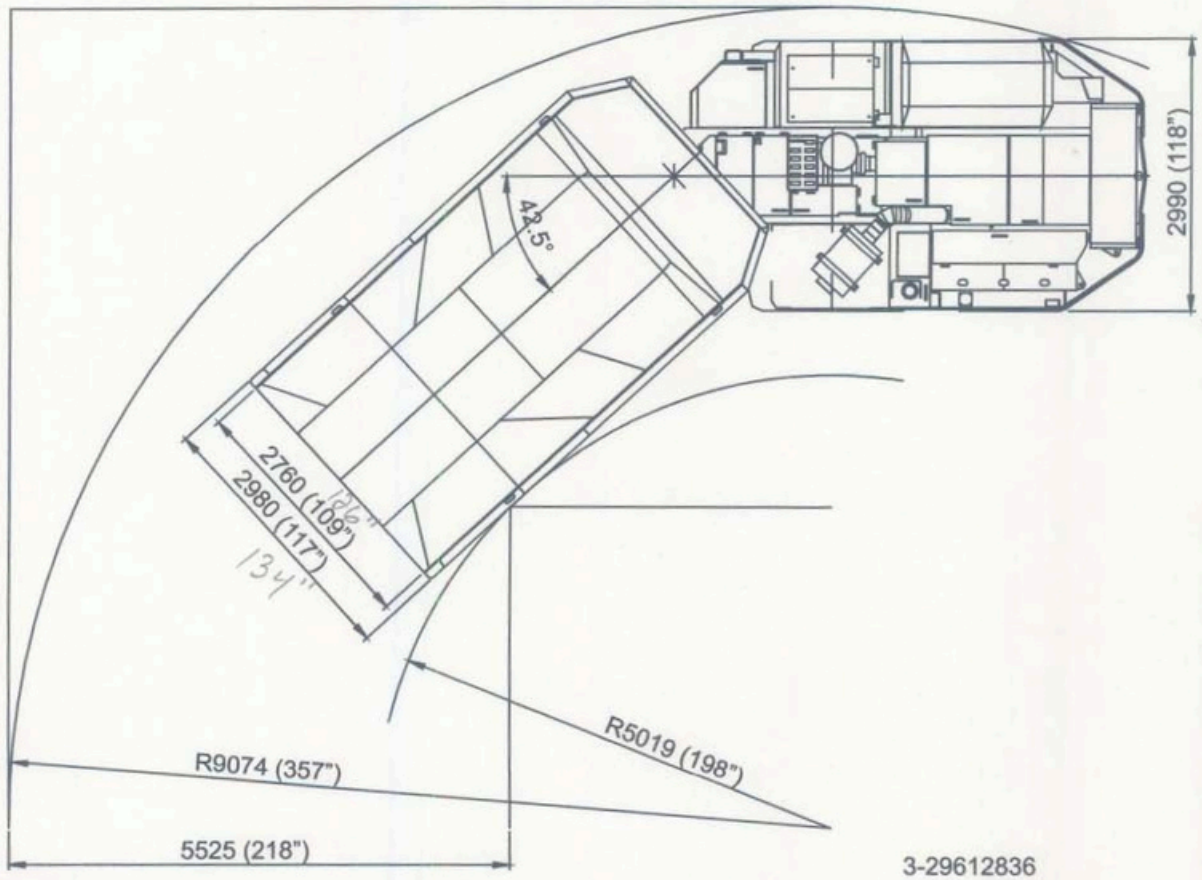

3-29612836

16082001hah

SANDVIK TAMROCK reserves the right to change this specification without further notice

SANDVIK TAMROCK Corp., P.O. Box 434
FIN-20101 Turku, Finland
Tel. +358 20544131
Fax. +358 20544130
e-mail: toro@sandvik.com

Weights

Operating weight	30 700 kg (67 700 lb)
Total loaded weight	70 700 kg (155 900 lb)

Capacities

Payload capacity	40 000 kg (88 125 lb)
Box std.	18.0 m³ (24yd³)

Dump box movements

Discharging time	13 sec
Dumping angle	62°

Driving speeds forward and reverse

1st gear	6.0 km/h (3.7 mph)
2nd gear	8.0 km/h (5.0 mph)
3rd gear	11.0 km/h (6.8 mph)
4th gear	14.5 km/h (9.0 mph)
5th gear	19.0 km/h (11.8 mph)
6th gear	25.5 km/h (15.8 mph)
7th gear	35.0 km/h (21.7 mph)
8th gear	45.0 km/h (27.9 mph)

Reversing with 1st and 3rd gear

Engine

Diesel engine (Euro Stage II / Tier II)	Detroit S-60 DDEC IV
Output	352 kW / 2100 r/min (475 hp)
Torque	2100 Nm / 1200 rpm
Number of cylinders	in line 6
Displacement	12 700 cm³
Cooling system	Water cooled
Combustion principle	Direct injected, turbo + inter cooler, 4- stroke
Air filtering	Donaldson
Exhaust system	HTI covered exhaust manifold & Turbo, Double wall exhaust pipe, Catalytic purifier and muffle
Fuel tank capacity	550 l (145 gal.)

Drive line

Converter	Dana SOH, CL 8672
Gearbox	Dana SOH, 8821
Axles	Front, Dana SOH, 21D, oscillation ± 9°. Rear, Dana SOH, 21D

Tyres

Size and type 26.5R25, Bridgestone VSNT E4

Other type of tyres available to user's choice. In certain applications the productive capabilities of the loader may exceed the TKPH value given by tyre manufacturer.

Sandvik Tamrock recommend that the user consult their tyre supplier to evaluate conditions and to find the best solution for application.

Operators compartment

Safety canopy with electric gear shift control

Height 2600 mm (102")

Optional air-conditioned ROPS/FOPS safety cabin

Height 2670 mm (105")

Lubrication system

Centralized manual lubrication

Optional automatic central lubrication

Manual languages

Spare part manual	
Operation instructions	main European languages
Maintenance instructions	main European languages
Engine spare part information	English
Machine spare part information	English
Workshop manual	
Operation instructions	main European languages
Maintenance instructions	main European languages
Engine workshop manual	Original
Power train components manual	Original
Optional equipment instructions	English

Optional box sizes

- Dump box capacity 18,0 m³(24yd³),width 2960/3240mm, flat front.
- Dump box capacity 19,0m³(25yd³),width 3260/3540mm, flat front.
- Dump box capacity 20,0m³(26 yd³),width 2760/2980mm.
- Dump box capacity 20,0m³(26yd³),width 2960/3240mm, flat front.
- Dump box capacity 20,0 m³(26yd³),width 3260/3540mm, flat front.
- Dump box capacity 22,0m³(29 yd³),width 2760/2980mm.
- Ejector box, capacity 16.5 m³ (22 yd³).

SANDVIK TAMROCK reserves the right to change this specification without further notice

SANDVIK TAMROCK Corp., P.O. Box 434
FIN-20101 Turku, Finland
Tel. +358 20544131
Fax. +358 20544130
e-mail: toro@sandvik.com