1-705-566-8190
marketing@bmcdowell.com

Since 1968
McDowell

2.2 lbs per Kg.

TORO

THE DIMENSIONS AND WEIGHTS OF THE BIGGEST PARTS T40 with ejector box

3-29601483

020299HAH

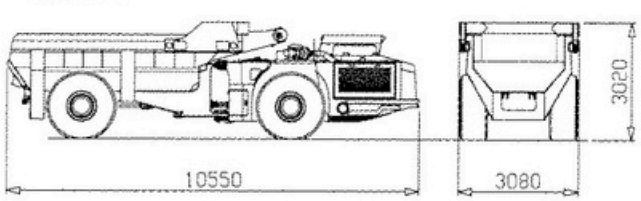

IN FULL OPERATION CONDITION
WEIGHT : 35500 KG

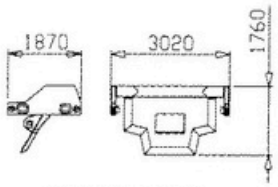

EJECTOR PLATE
WEIGHT : 2400 KG

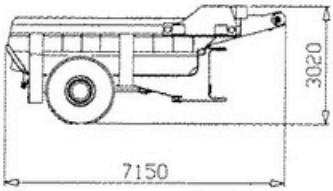

REAR PART AS WHOLE
WEIGHT : 17700 KG

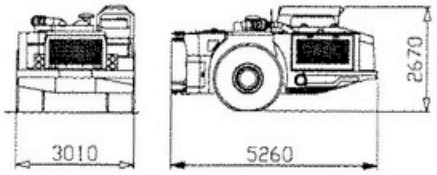

FRONT PART AS WHOLE
WEIGHT : 17800 KG

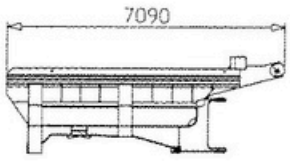

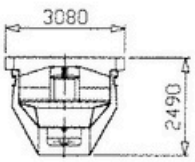

REAR FRAME + BOX
WEIGHT : 7900 KG

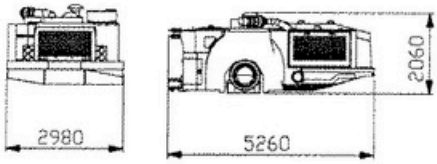

FRONT PART WITHOUT
CABIN AND WHEELS
WEIGHT : 15000 KG

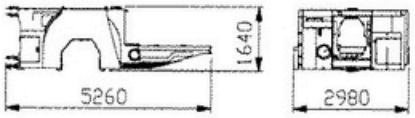

FRONT FRAME
WEIGHT: 4900KG

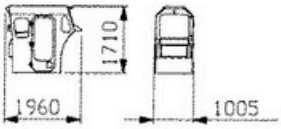

CABIN
WEIGHT: 1200KG

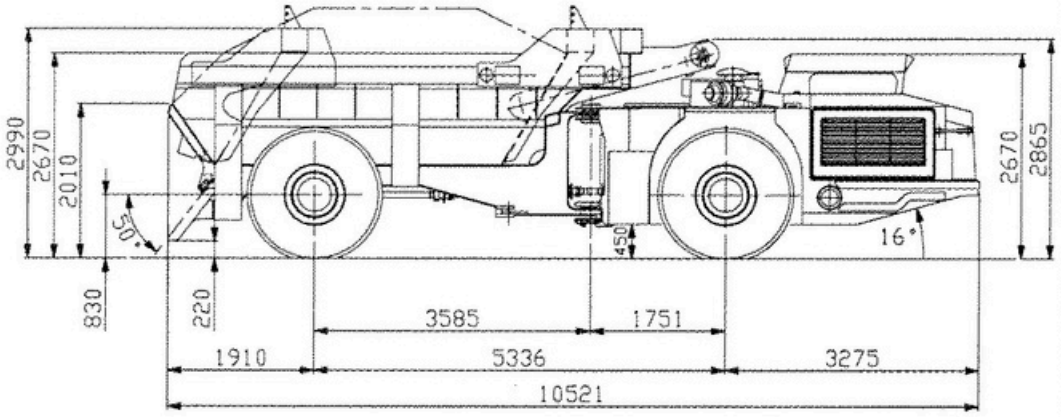
2990
2670
2010
50°
830
220
450
16°
2670
2865
3585
1751
1910
5336
3275
10521

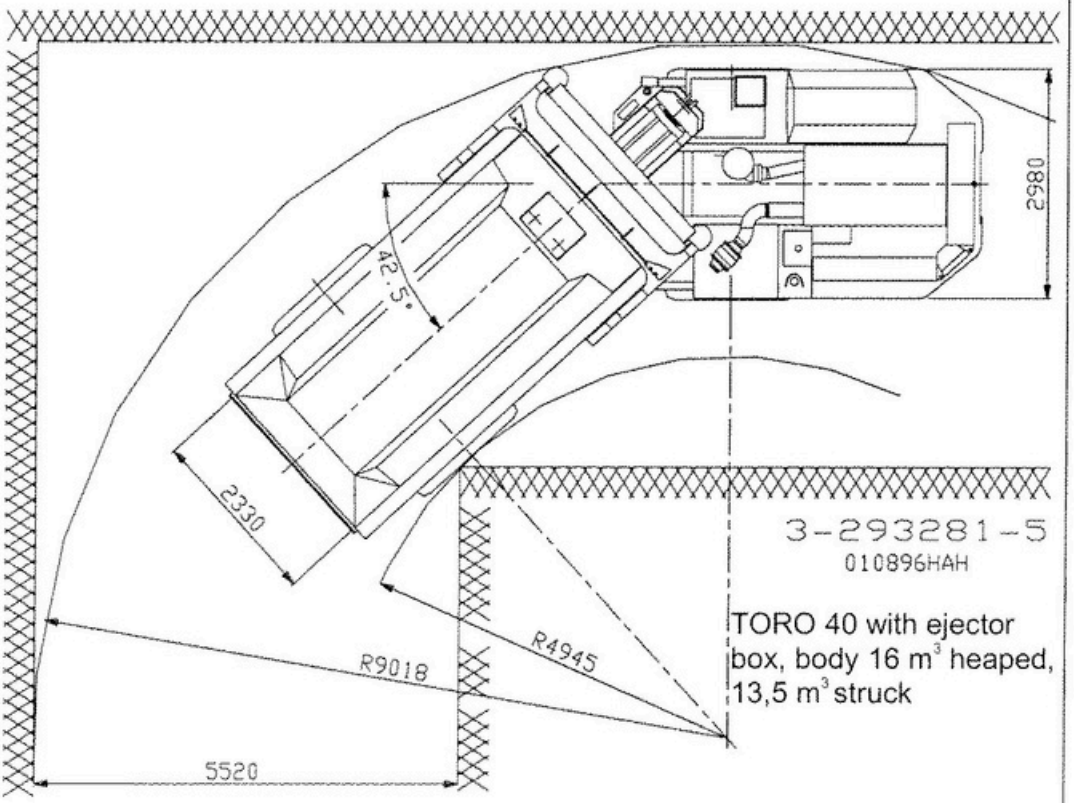
2980
42.5°
2330
R9018
R4945
5520
3-293281-5
010896HAH
TORO 40 with ejector box, body 16 m³ heaped, 13,5 m³ struck