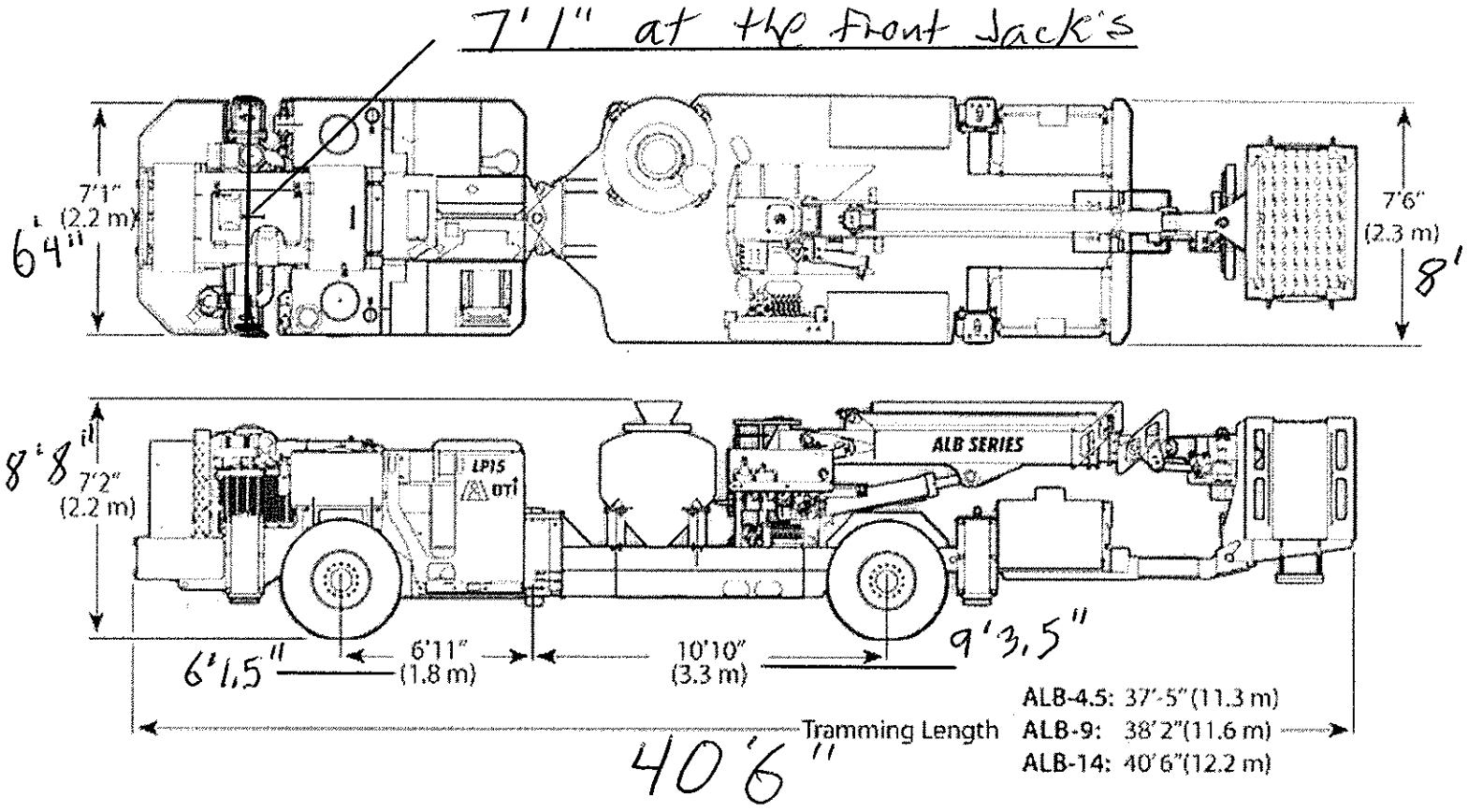

ALB ANFO LOADERS WEIGHTS & DIMENSIONS				
		ALB-4.5	ALB-9	ALB-14
Operating Weight	lbs	45,365	46,550	47,735
	kg	20,620	21,160	21,700
Overall Tramming Length	feet	37'5"	38'2"	40'6"
	meter	11.3	11.6	12.2
Overall Width	feet	7'6"	7'6"	7'6"
	meter	2.3	2.3	2.3
Tramming Height	feet	8'8"	8'8"	8'8"
	meter	2.6	2.6	2.6
Carrier Articulation	degree	+/- 45o	+/- 45o	+/- 45o
Inside Turning Radius	feet	15'5"	15'5"	15'5"
	meter	4.6	4.6	4.6
Outside Turning Radius	feet	20'	26'9"	27'5"
	meter	7.9	8.2	8.4
Boom Swing	degree	+/- 35o	+/- 35o	+/- 35o
Maximum Horizontal Reach	feet	26'	36'	42'10"
	meter	7.9	11	13.1

All dimensions and specifications are approximate and subject to change without notice.