TAMROCK	AXERA D05 126 (H)	6 - 221 S - C 2000 - 08 - 23	1/2 DOC 010

Overall Length	
TF 500 x 10	10855
TF 500 x 12	11180
TF 500 x 14	11195
TF 500 x 16	12250

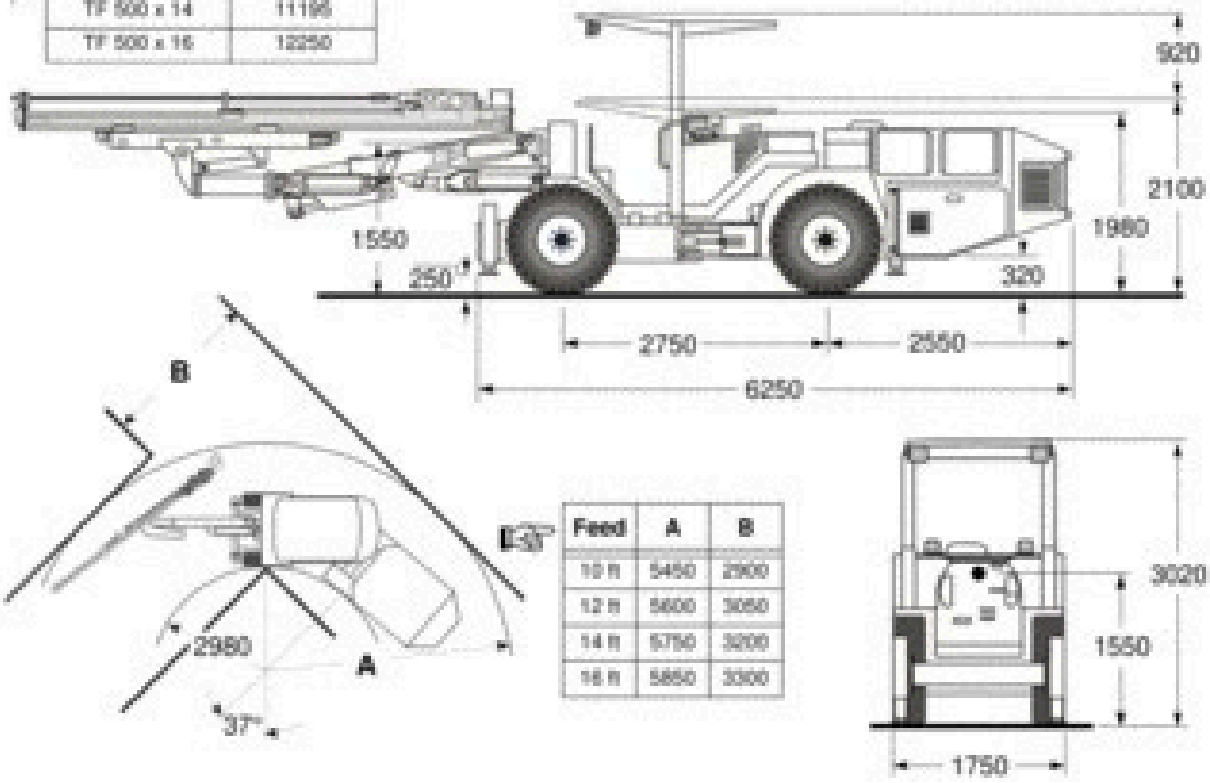

Feed	A	B
10 ft	5450	2900
12 ft	5600	3050
14 ft	5750	3200
16 ft	5850	3300

Compact single boom high power face drill, hydrostatic transmission four wheel drive jumbo, for development and cross-cutting in sections up to 38 m² .

Rock drill

Model ..... HL 510 S-38
Standard male shank ..... R 38
Weight ..... 130 kg
Impact frequency ..... 59 Hz
Percussion pressure ..... 175 bar
Impact power ..... 16 kW

Drill feed

	Standard	*Alternative*
Model	TF 500	TTF 500
Steel length	10 to 16 ft	6/10 to 12/16 ft
Drill steel	H 32-H 35	H 32-H 35

Boom

Model ..... B 26 F
Type ..... Parallel holding
Weight (with hoses) ..... 1900 kg
Feed roll-over ..... 360°
Boom extension ..... 1200 mm
Feed extension ..... 1600 mm

Hydraulic control system

Model ..... THC 500
Control Functions
Power control ..... adjustable full power
adjustable collaring power
Rotation control ..... adjustable rotation speed
reversible rotation
Flushing control ..... water flushing
Automatic Functions
collaring, stop-and-return, anti-jamming, flushing

Power Pack

Electrical motor ..... 45 kW (60 hp)
Hydraulic pump types
Percussion, feed & boom ..... variable displacement, axial piston
Rotation ..... gear

Tramming possibilities

Tramming speed ..... 1 st gear ..... 5 km/h
2 nd gear ..... 12 km/h
Maximum operating grade ..... up to 35%
Weight, approximate ..... 11000 kg

SANDVIK TAMROCK SECOMA reserves the right to change this specification without further notice.