Körfmann Lufttechnik GmbH

List of Types / Overview of Performance

No flame or explosion protection

Fan Type	Volumetric Flow [m³/s]	Total Pressure [Pa]
ESN 3-8	0.6 - 0.9	380 - 110
ESN 4-15	1.3 - 1.8	640 - 130
ESN 4-30	1.9 - 3.1	740 - 370
ESN 5-55	2.5 - 3.8	1140 - 230
ESN 5-75	2.6 - 4.1	1560 - 260
ESN 6-75	2.1 - 4.7	1350 - 160
ESN 6-110	4.0 - 6.5	1670 - 320
ESN 6-150	4.1 - 7.6	2340 - 450
ESN 7-220	5.8 - 9.5	2500 - 350
ESN 7-300	6.8 - 11.2	2780 - 520
ESN 8-300	8.6 - 13.8	2380 - 450
ESN 8-370	9.1 - 15.2	2700 - 550
ESN 8-450	10.2 - 16.2	3040 - 600
ESN 9-300	7.0 - 14.5	2750 - 300
ESN 9-370	8.0 - 16.5	2850 - 400
ESN 9-450	10.0 - 18.8	3000 - 500
ESN 9-550	11.0 - 18.0	3100 - 520
ESN 9-750	14.0 - 22.0	3680 - 750

B90-553 →

More precise power ranges in the characteristic curves.

Axial flow fans of the type ESN possess excellent aerodynamic characteristics. Careful profiling of the rotating blades guarantees high pressure gradients and efficiency levels

Drive:

Low-voltage grey cast iron motors IP 55. Motors conform to efficiency class IE 1, IE 2 or IE 3 with regard to guideline IEC 60034-30 and ErP

McDOWELL BROTHERS INDUSTRIES INC.
2018 KINGSWAY BLVD.
SUDBURY, ONTARIO P3B 4J8
CANADA
(705) 566-8190

Fan Type ESN

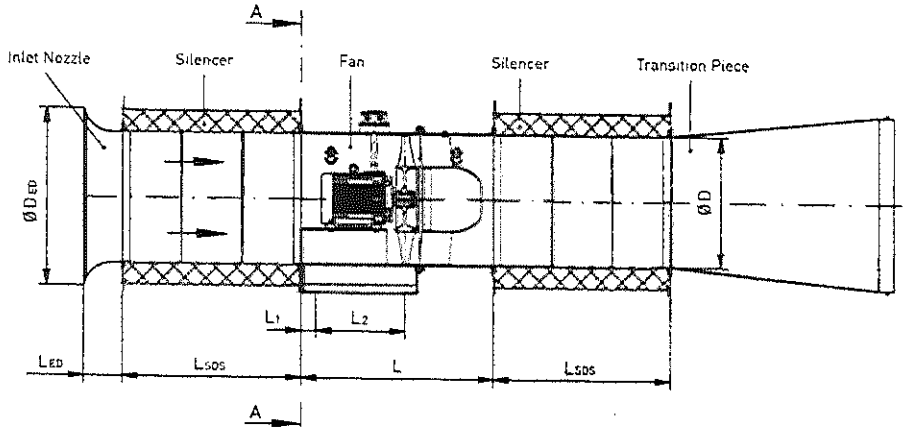

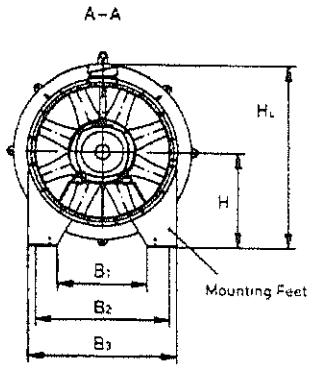

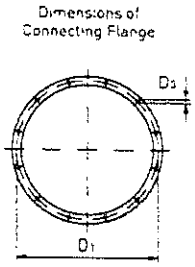

Type	ID No.	Ø D mm	Length L mm	Height HL mm	Height H mm	Power kW	Weight kg	Connecting Flange Ø D1 mm	X pcs	Ø D3 mm	Dimensions of Mounting Feet L1 mm	L2 mm	B1 mm	B2 mm	B3 mm
ESN 3–8	05300982	300	500	515	275	0.75	55	355	4	14	–	–	–	–	400*
ESN 4–15	05409038	400	700	645	350	1.5	110	455	8	14	75	300	300	400	500
ESN 4–30	05409044	400	700	645	350	3.0	120	455	8	14	75	300	300	400	500
ESN 5–55	05509153	500	950	765	400	5.5	250	560	8	20	100	350	300	500	600
ESN 5–75	05509134	500	950	770	400	7.5	240	560	8	20	100	350	300	500	600
ESN 6–75	05619197	600	1020	860	450	7.5	270	660	12	20	110	400	400	600	700
ESN 6–110	05619168	600	1020	880	450	11.0	290	660	12	20	105	405	400	600	700
ESN 6–150	05619163	600	1020	875	450	15.0	330	660	12	20	110	400	400	600	700
ESN 7–220	05729047	700	1235	1050	550	22.0	480	760	12	20	100	575	500	700	800
ESN 7–300	05729044	700	1235	1050	550	30.0	500	760	12	20	100	575	500	700	800
ESN 8–300	05089055	800	1160	1130	580	30.0	550	860	12	20	80	580	600	800	900
ESN 8–370	05089054	800	1400	1150	580	37.0	630	860	12	20	100	700	600	800	900
ESN 8–450	05089065	800	1400	1150	580	45.0	680	860	12	20	100	700	600	800	900
ESN 9–300	05099175	900	1300	1255	650	30.0	700	960	16	20	100	600	600	900	1000
ESN 9–370	05099137	900	1300	1270	650	37.0	730	960	16	20	100	600	600	900	1000
ESN 9–450	05099220	900	1350	1270	650	45.0	750	960	16	20	100	650	600	900	1000
ESN 9–550	05099179	900	1480	1275	650	55.0	890	960	16	20	100	650	600	900	1000
ESN 9–750	05099198	900	1630	1305	650	75.0	1100	960	16	20	112	776	600	900	1000

Data refers to KORFMANN standard series (nonbinding). * Mounting feet: lightweight design

Pole-changing motors or individually adjustable impellers on inquiry

Korfmann Lufttechnik GmbH

Kerfmann Lufttechnik GmbH

ESN 3 – 8 to ESN 9 – 750

Type:

ESN 3 – 8 to ESN 9 – 750; Electric fan not flame-proof or explosion-proof

Type of Construction:

Axial impeller with guide vane, profiled rotating blades, steel housing, impeller of Silumin

Application:

Industrial, tunnel and gallery ventilation, mining where a flammable or explosive atmosphere is not expected

Power:

Volumetric flow up to 20 m^3/s, total pressure up to 3500 Pa

Control:

Pole-changing motors*, infinitely variable speed regulation*, individually adjustable impeller (as required)

Drive:

Three-phase squirrel-cage motors, special design, protection class IP 55, isolation class F, tropic-proof, external terminal box

Conforms to efficiency class IE 1, IE 2, IE 3

Color:

Pure white (RAL 9010)**

Scope of Supply:

Fan, operating manual

* Depending on the design, single-stage, pole-changing or by frequency drive
** Standard color – other colors on inquiry



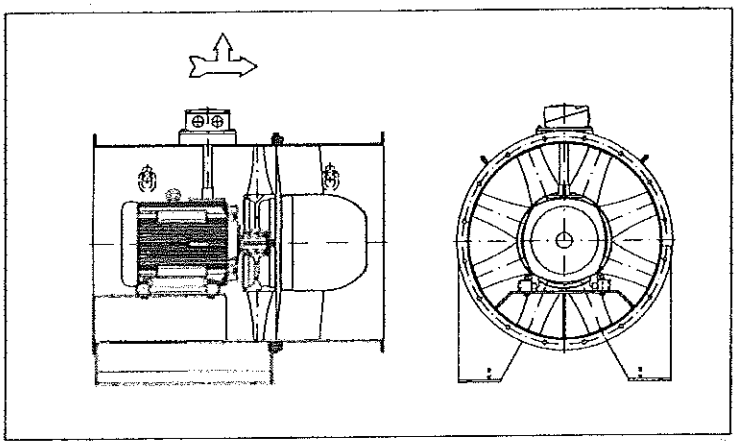

Technical representation of an ESN 9 with external terminal box and mounting feet